ORDER NO. AD9402036C2

Service Manual

Portable Stereo CD System

Radio Cassette

RX-DT75

*1 DOLBY B NR

*2 MASH multi-stage noise shaping

COMPACT disc DIGITAL AUDIO

Colour

(K) . . . . Black Type

Areas

Suffix for Model No.	Area	Colour
(EB)	Great Britain	(K)
(EG)	Europe and Germany	

With Useful Troubleshooting for Mechanism Block

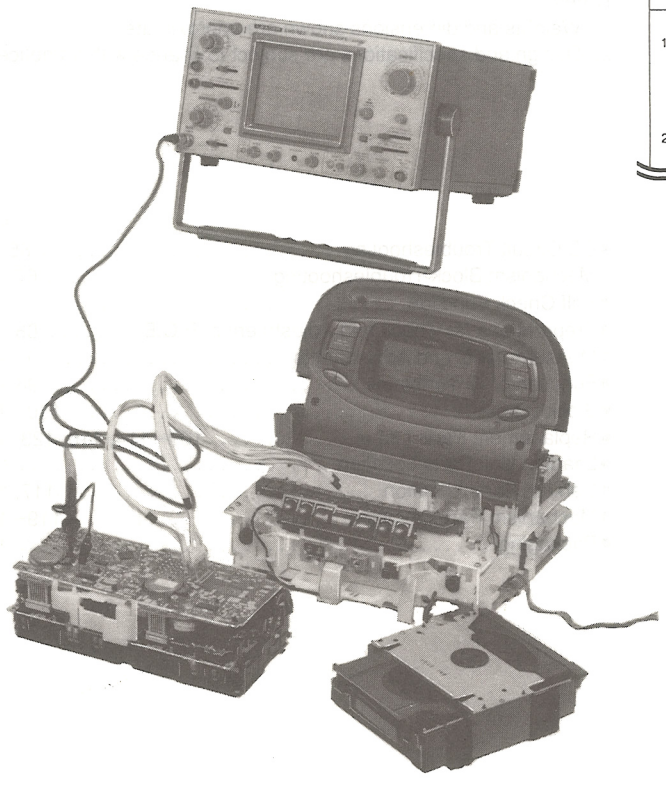

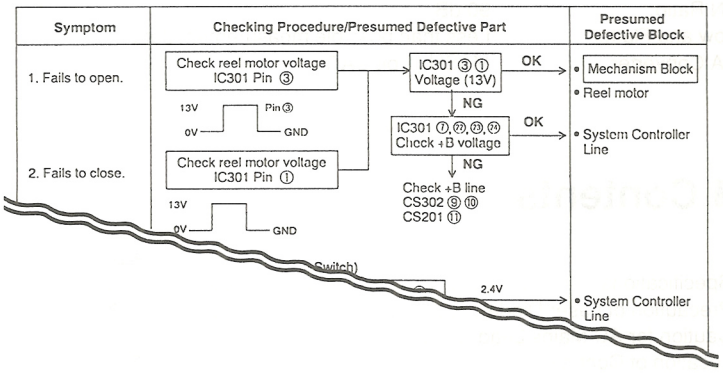

■ Contents

Page

1. Preparation 67
2. Main Block of Mechanism Control P.C.B. 67
3. Object and Description 67
4. Summary of Troubleshooting Guide 68
5. Electrical Block Troubleshooting . . . . . 69~72
6. Mechanism Block Troubleshooting 73, 74
7. Trouble Examples (Cassette Deck) 74
8. Mechanism Block Operation . . . . . 75~78
9. Time Chart . . . . . 79~84

Panasonic

TAPE DECK: AR-1 MECHANISM SERIES
TRAVERSE DECK: RAE0113Z MECHANISM SERIES

■ Specifications

General:

Power Requirement:	AC; 230~240 V, 50 Hz Battery; 15 V (Ten R20/LR20, UM-1 batteries) Memory Back-up for Computer/Clock; 6 V (Four R6/LR6, UM-3 batteries)
Power Consumption:	57 W
Power Output:	70 W (PMPO)
Speaker:	Woofer; 8 cm PM Dynamic speaker 2.7Ω Midrange; 8 cm PM Dynamic speaker 8Ω Tweeter; 1.4 cm Ceramic speaker
Inputs:	MIX MIC; 2.5 mV, 200~600Ω, Ø3.5 AUX; 200 mV/47 kΩ, Ø3.5 (STEREO)
Outputs:	HEADPHONES; 32Ω, Ø3.5 CD OUT; 1 V, Ø3.5 (STEREO)
Dimensions:	680 (W)×192 (H)×284 (D) mm (Top panel closed)
Weight:	7.9 kg without batteries

CD Player:

Sampling Frequency:	44.1 kHz
Decording:	16-bit linear
Beam Source:	Semiconductor laser (wavelength 780 nm)
No. of Channels:	2 channels, stereo
Frequency Range:	20~20,000 Hz
Dynamic Range:	90 dB
S/N Ratio:	90 dB
Wow and Flutter:	Less than possible measurement data
D/A Converter:	MASH (1 bit DAC)

Radio:

Frequency Range:	FM; 87.5~108.0 MHz LW; 144~288 kHz MW; 522~1611 kHz
Intermediate Frequency:	FM; 10.7 MHz LW/MW; 459.0 kHz
Sensitivity:	FM; 4.4 µV/0.5 mW H.P. output (−3 dB Limit Sens.) LW/MW; 56 µV/m/0.5 mW H.P. output (Max.)

Tape Recorder:

Frequency Range:	Normal; 30~16,000 Hz CrO_2; 30~17,000 Hz METAL; 30~18,000 Hz
Recording System:	AC bias, AC erase
Tape Speed:	4.8 cm/s
Monitor System:	Variable sound monitor
Track System:	4-track 2-channel stereo recording and playback

***1Dolby noise reduction manufactured under license from Dolby Laboratories Licensing Corporation.**
"Dolby" and the double-D symbol are trade marks of Dolby Laboratories Licensing Corporation.

***2MASH is a trademark of NTT.**

Notes:
1. Weights and dimensions shown are approximate.
2. Design and specifications are subject to change without notice.

■ Contents

	Page
●Specifications	2
●Precaution of Laser Diode	3
●Caution for AC Mains Lead	4
●Location of Controls	5, 6
●Concerning the Top Panel	7
●Common Operations	7, 8
●Setting the Clock	9
●Having Fun with a Microphone	10
●Using the External Units	11
●Concerning the Remote Control	11
●Menu Operations	12~14
●Handling Precautions for Traverse Deck	15
●Disassembly Instructions	15~30
●Replacement of Main Parts	31~36
●Reassembly Instructions	37~41
●Schematic Diagram	42~55
●Printed Circuit Board Diagram	56~62
●Wiring Connection Diagram	63, 64
●CD Circuit Troubleshooting	65, 66
●Mechanism Block Troubleshooting	67~84
●Self Check Function	85
●Preparations for Check and Adjustment of P.C.B.	86~90
●Measurements and Adjustments	91~95
●Function of IC Terminals	96~99
●Block Diagram	100~106
●Replacement Parts List	107~114, 116, 123, 124
●Loading Unit Parts Location	115
●Cabinet Parts Location	117, 118
●Mechanism Parts Location	119~122
●Packaging	124

CAUTION:
THIS PRODUCT UTILIZES A LASER.
USE OF CONTROLS OR ADJUSTMENTS OR PERFORMANCE OF PROCEDURES OTHER THAN THOSE SPECIFIED HEREIN MAY RESULT IN HAZARDOUS RADIATION EXPOSURE.

■ Precaution of Laser Diode

CAUTION: This product utilizes a laser diode with the unit turned "on", invisible laser radiation is emitted from the pick up lens.

Wave length: 780 nm
Maximum output radiation power from pick up: 100 µW/VDE

Laser radiation from the pick up lens is safety level, but be sure the followings:

1. Do not disassemble the optical pick up unit, since radiation from exposed laserd diode is dangerous.
2. Do not adjust the variable resistor on the pickup unit. It was already adjusted.
3. Do not look at the focus lens using optical instruments.
4. Recommend not to look at pick up lens for a long time.

ACHTUNG: Dieses produkt enthält eine laserdiode. Im eingeschalteten zustand wird unsichtbare laserstrahlung von der lasereinheit abgestrahlt.

Wellenlänge: 780 nm
Maximale strehlungsleistung der lasereinheit: 100 µW/VDE

Die strahlung an der lasereinheit ist ungefährlich, wenn folgende punkte beachtet werden:

1. Die lasereinheit nicht zerlegen, da die strahlung an der freigelegten laserdiode gefährlich ist.
2. Den werksseitig justierten einstellregler der lasereinreit nicht verstellen.
3. Nicht mit optischen instrumenten in die fokussierlinse blicken.
4. Nicht über längere zeit in die fokussierlinse blicken.

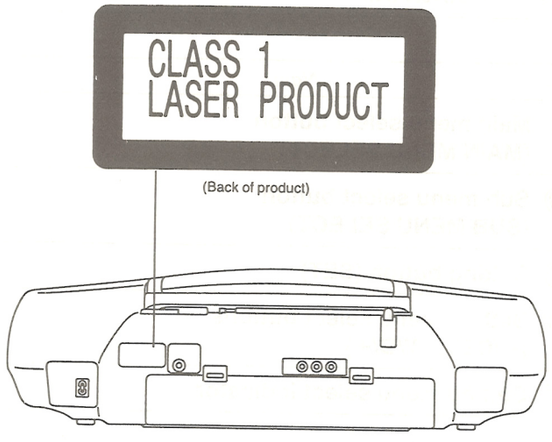

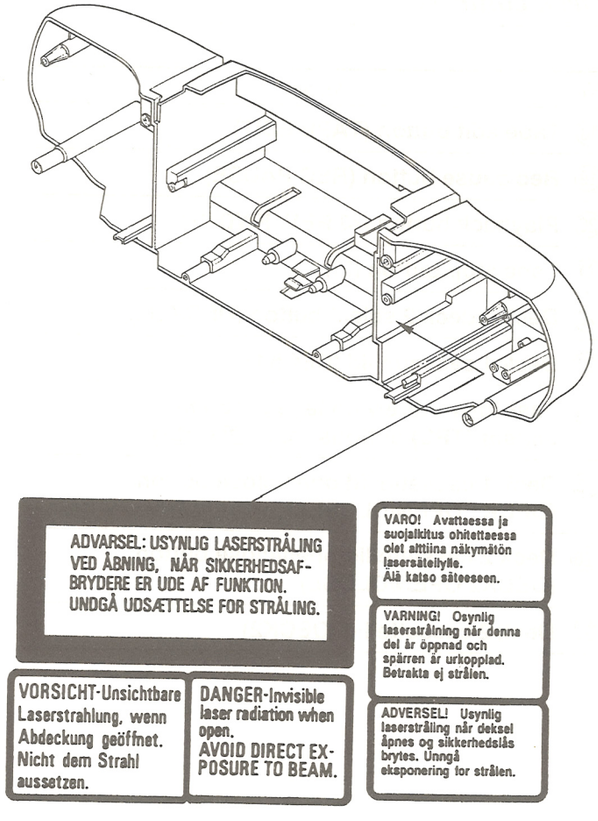

■ Caution for AC Mains Lead [(EB) area only]

For your safety, please read the following text carefully.

This appliance is supplied with a moulded three pin mains plug for your safety and convenience.
A 5-ampere fuse is fitted in this plug.
Should the fuse need to be replaced please ensure that the replacement fuse has a rating of 5-ampere and that it is approved by ASTA or BSI to BS1362.
Check for the ASTA mark ◈ or the BSI mark ♡ on the body of the fuse.

If the plug contains a removable fuse cover you must ensure that it is refitted when the fuse is replaced.
If you lose the fuse cover the plug must not be used until a replacement cover is obtained.
A replacement fuse cover can be purchased from your local dealer.

CAUTION!
IF THE FITTED MOULDED PLUG IS UNSUITABLE FOR THE SOCKET OUTLET IN YOUR HOME THEN THE FUSE SHOULD BE REMOVED AND THE PLUG CUT OFF AND DISPOSED OF SAFELY.
THERE IS A DANGER OF SEVERE ELECTRICAL SHOCK IF THE CUT OFF PLUG IS INSERTED INTO ANY 13-AMPERE SOCKET.

If a new plug is to be fitted please observe the wiring code as shown below.
If in any doubt please consult a qualified electrician.

IMPORTANT

The wires in this mains lead are coloured in accordance with the following code:

Blue: Neutral
Brown: Live

As the colours of the wires in the mains lead of this appliance may not correspond with the coloured markings identifying the terminals in your plug, proceed as follows:
The wire which is coloured BLUE must be connected to the terminal in the plug which is marked with the letter N or coloured BLACK.

The wire which is coloured BROWN must be connected to the terminal in the plug which is marked with the letter L or coloured RED.

Under no circumstances should either of these wires be connected to the earth terminal of the three pin plug, marked with the letter E or the Earth Symbol ⏚.

Before use

Remove the connector cover as follows.

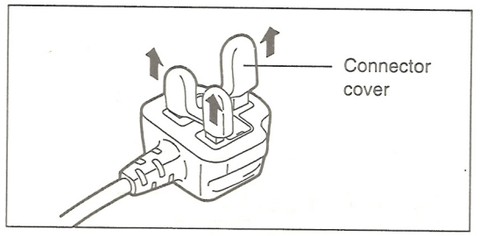

How to replace the fuse

1. Remove the fuse cover with a screwdriver.

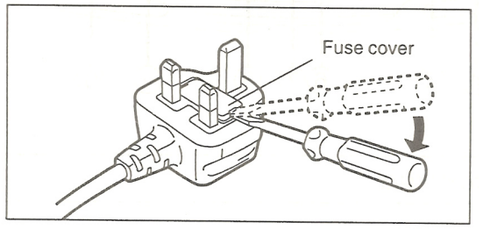

2. Replace the fuse and attach the fuse cover.

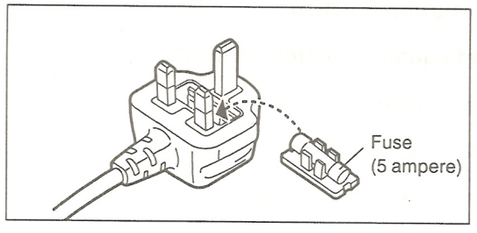

■ Location of Controls

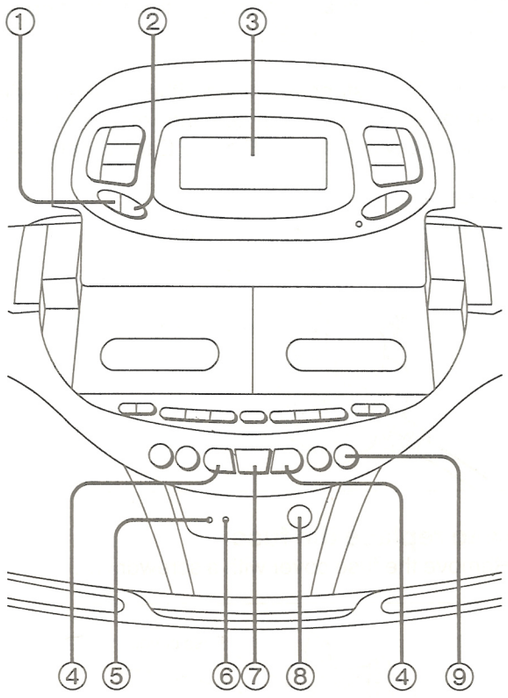

Basic controls

No.	*Name*
①	Timer button (TIMER)
②	Preset equalizer button (PRESET EQ)
③	Display section
④	Volume buttons (VOL −, VOL +)
⑤	Power/battery check indicator (POWER/BATT)
⑥	Standby indicator (STANDBY ⏻) When the unit is connected to the AC mains supply, this indicator lights up in standby mode and goes out when the unit is turned on.
⑦	Power "STDBY ⏻ (AC)/ON" switch [POWER, STDBY ⏻ (AC)/ON] Press to switch the unit from on to standby mode or vice versa. In standby mode, the unit is still consuming a small amount of power.
⑧	Remote control signal sensor (SENSOR)
⑨	Top panel open/close button (TOP PANEL OPEN/CLOSE)

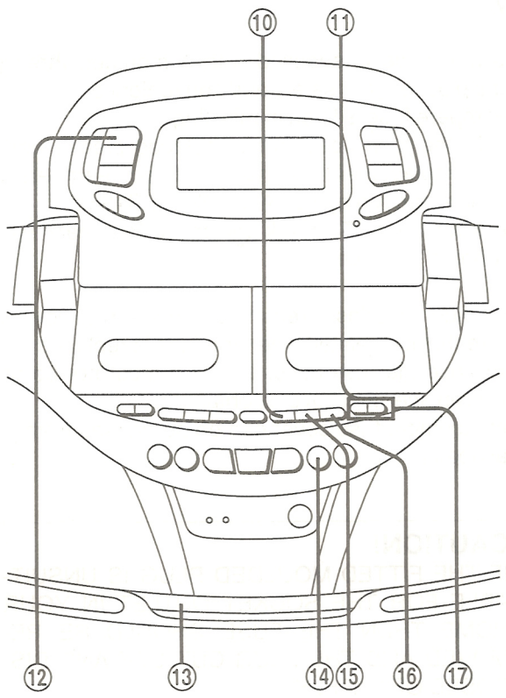

Tuner controls

No.	*Name*
⑩	Tuner/band button (TUNER/BAND)
⑪	Tuning buttons (TUNING/CD −/⏮, ⏭/+)

CD controls

No.	*Name*
⑫	Auto CD record button (AUTO CD RECORD)
⑬	CD tray
⑭	CD tray open/close button (CD OPEN/CLOSE)
⑮	Play/pause button (▷/▯▯)
⑯	CD stop/clear button (□/CLEAR)
⑰	Skip/search buttons (TUNING/CD −/⏮, ⏭/+)

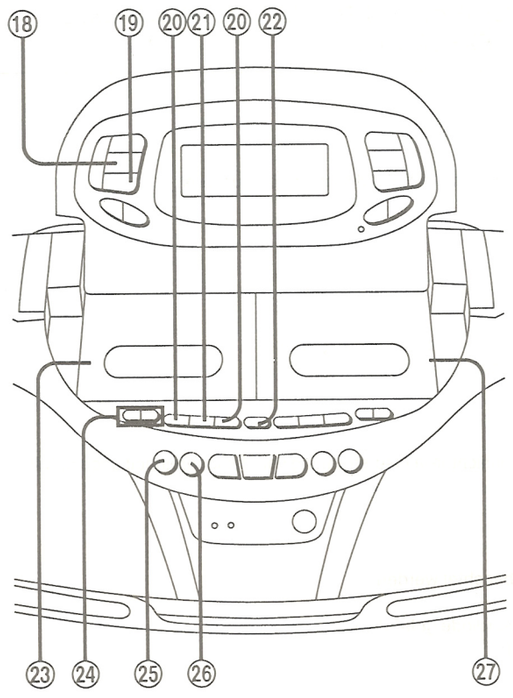

Deck controls

No.	*Name*
⑱	Tape edit button (TAPE EDIT)
⑲	Rec pause button (REC PAUSE)
⑳	Playback button (◁ REV, FWD ▷)
㉑	Tape stop button (□)
㉒	Deck 1/deck 2 select button (DECK1/2)
㉓	Deck 1 cassette lid (DECK1)
㉔	Fast-forward/rewind/tape program sensor (TPS) buttons (◁◁ TPS ▷▷)
㉕	Deck 1 cassette lid open/close button (DECK1 OPEN/CLOSE)
㉖	Deck 2 cassette lid open/close button (DECK2 OPEN/CLOSE)
㉗	Deck 2 cassette lid (DECK2)

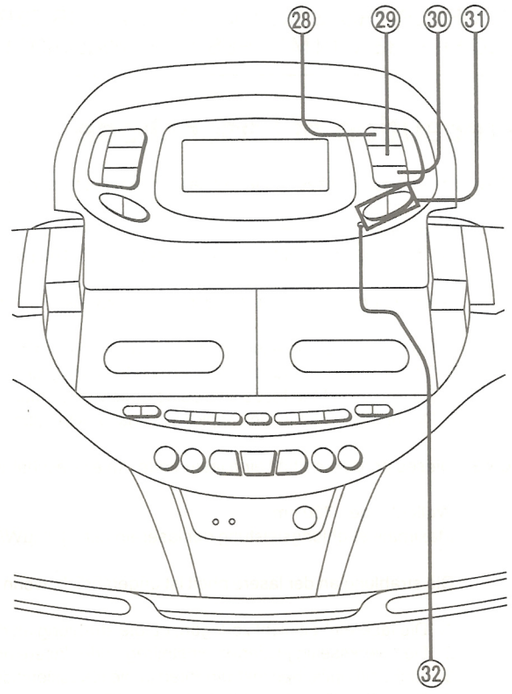

MENU controls

No.	*Name*
㉘	Main menu select button (MAIN MENU SELECT)
㉙	Sub menu select button (SUB MENU SELECT)
㉚	Setting button (SET)
㉛	Setting menu select buttons (−/REV, FWD/+)
㉜	Setting menu select indicator

■ Concerning the Top Panel

Opening the panel

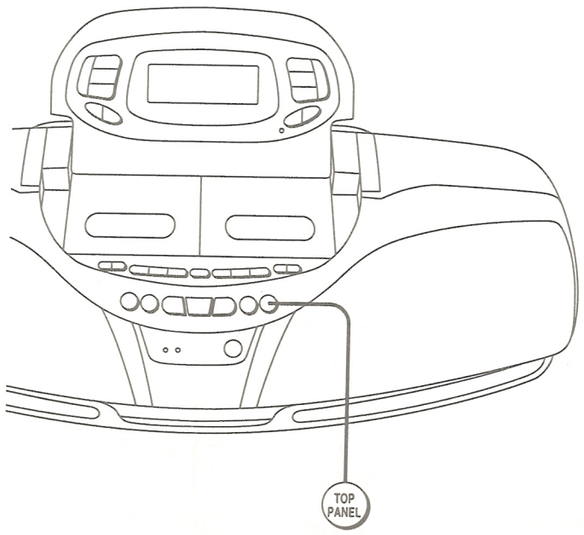

To open the panel

Press TOP PANEL OPEN/ CLOSE.
The unit is turned on.

To close the panel

Press TOP PANEL OPEN/ CLOSE.

When dry cell batteries are being used to power the unit, the panel cannot be opened or closed by pressing TOP PANEL on the remote control in the unit off mode. Turn the unit on first before using this button.

■ Common Operations

Basic operations

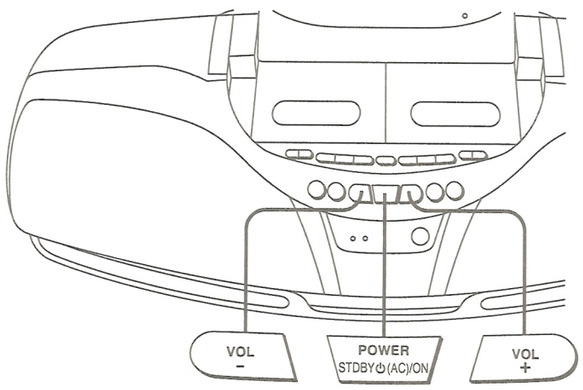

Turning the unit ON/OFF

To turn the unit ON:
Press POWER.

To turn the unit OFF:
Press POWER.
When using an AC power, the unit is turned to standby mode. (STANDBY ⏻ indicator lights.)

Adjusting the volume

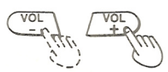

Press VOL – or VOL + to adjust the volume to the desired level.
VOL +: Press this to increase the volume.
VOL – : Press this to reduce the volume.

The volume level can be adjusted from "–– dB" (lowest) to "0 dB" (highest).

Reference

The volume can be adjusted even when the unit is off.

To listen through headphones (not included)

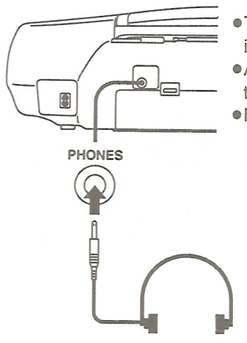

- Turn down the volume before connecting the headphones.
- Avoid listening for prolonged periods of time to prevent hearing damage.
- Plug type used: Stereo mini

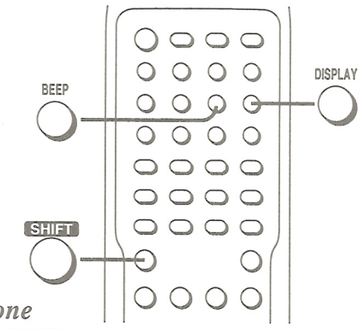

Beep tone

When one of the function buttons is pressed, one beep is heard to verify that the button has been properly operated. When one of the buttons has been pressed in error, two beeps are heard as a warning.

If you do not intend to use the beep tone function:
(Available only from the remote control)

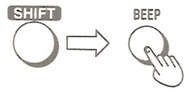

Holding SHIFT down

While the unit is on;
While holding SHIFT down, press BEEP.
The "BEEP OFF" display appears.

To use the beep tone function, repeat the same operation. (The "BEEP ON" display appears.)

Displaying the present time or linear tape counter

These operations come in handy to check the present time during play or calculate the time remaining on the tape during recording using the linear tape counter.
(Available only from the remote control)

Holding SHIFT down

While the unit is on;
While holding SHIFT down, press DISPLAY.
Each time DISPLAY is pressed, the display will change.

Example: When DISPLAY is pressed during CD play;

1. The play status is indicated.
2. The present time is indicated.
3. The linear tape counter display appears.

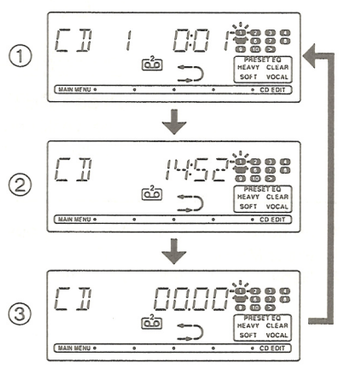

"––––" appears for the linear tape counter display when no tape has been loaded.

Easy listening

(Only when a household mains outlet is used for the unit)

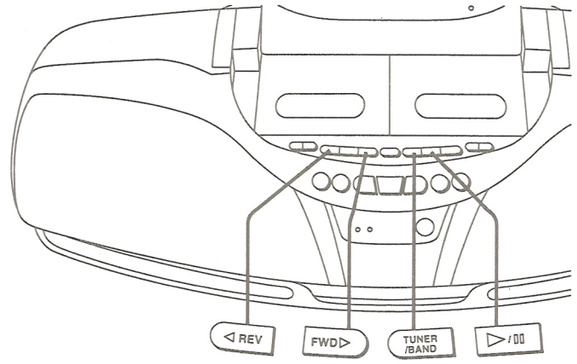

When a CD or tape is inserted, you can start play directly by pressing a single button (even in the unit off mode).

Listening to CDs:

Listening to tapes:

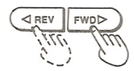

Listening to radio broadcasts:

References

- You can play directly by pressing the same button on the remote control transmitter.
- Even when the unit is being powered by batteries, you can start play directly by pressing the single button (mentioned above) after turning the unit on.

■ Setting the Clock

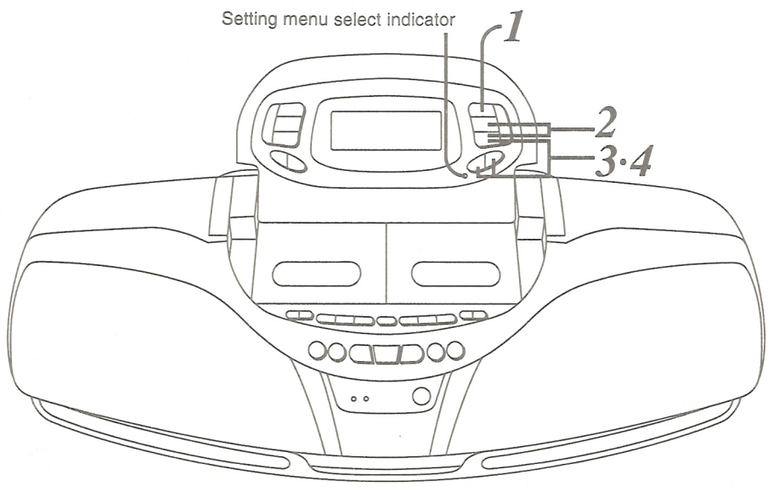

Example: Setting the clock to 16:20 in the TAPE mode;

1

Press MAIN MENU SELECT to display TIME.

→TAPE→**TIME**→SOUND

(The display changes each time the button is pressed.)

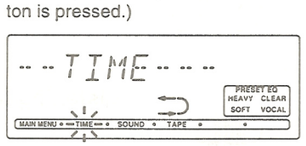

2

Press SUB MENU SELECT to display CLOCK.

→TIMER→SLEEP→**CLOCK**

(The display changes each time the button is pressed.)

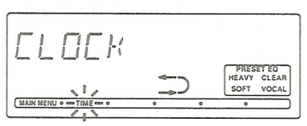

Press SET.

The setting menu select indicator flashes.

3 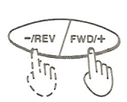

Press –/REV or FWD/+ to display the hours (16).

1–2–3…15–16…23–0

(The display changes each time the button is pressed.)

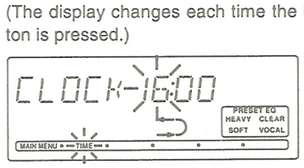

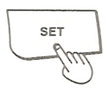

Press SET.

4 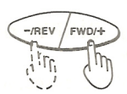

Press –/REV or FWD/+ to display the minutes (20).

01–02…19–**20**…59–00

(The display changes each time the button is pressed.)

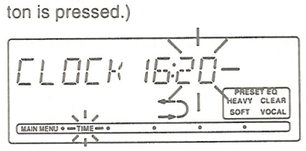

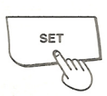

Press SET.

The clock now starts operating, and the display returns to its original status.

If you have made a mistake during operation:

1. Press MAIN MENU SELECT.
2. Repeat the procedure from step 1.

■ Having Fun with a Microphone

Karaoke

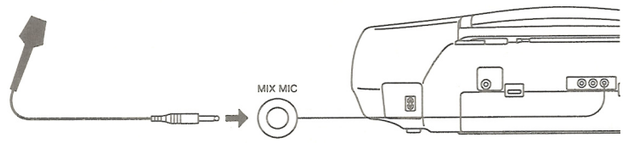

1. **Lower the volume and connect the microphone. (Plug type: mini)**
2. **Start playing a CD or tape or turn on the radio.**
3. **Start Karaoke singing into the microphone and adjust the volume.**

Recording your own voice from the microphone

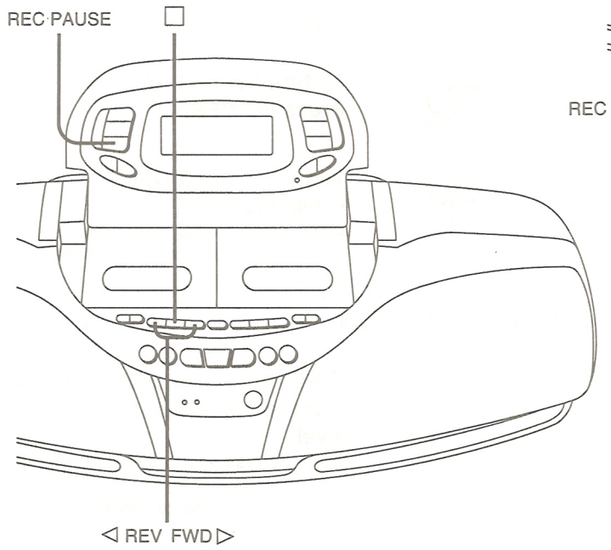

1. **Connect the microphone, and load the tape in deck 2.**
2. **Select the Dolby noise reduction setting and reverse mode.**
3. **Press the tape □ button.**
4. **Press REC PAUSE.**
5. **Press ◁ REV or FWD ▷.**
   Recording start.

Recording karaoke sound

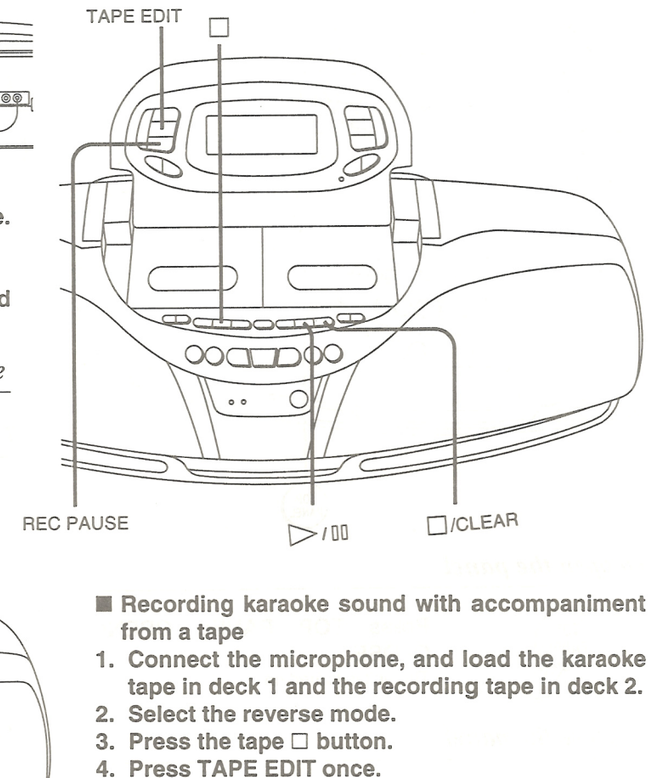

■ Recording karaoke sound with accompaniment from a tape

1. **Connect the microphone, and load the karaoke tape in deck 1 and the recording tape in deck 2.**
2. **Select the reverse mode.**
3. **Press the tape □ button.**
4. **Press TAPE EDIT once.**
   Play and recording start.

■ Recording karaoke sound with accompaniment from a CD

1. **Connect the microphone, and load the tape in deck 2.**
2. **Select the Dolby noise reduction setting and reverse mode.**
3. **Press □/CLEAR.**
4. **Press REC PAUSE.**
5. **Press ▷/▯▯ .**
   Play and recording start.

Notes

- Plug the microphone off the microphone jack when not in use.
- If you hear strange noises (squealing or howling) during mixing, move the microphone farther away from the speakers or turn down the volume.
- When you are enjoying KARAOKE with CDs, your voice can be heard only when the CD is in play, not when the CD is in stop or pause mode.

■ Using the External Units

Listening to CDs on a stereo system

■ Connections

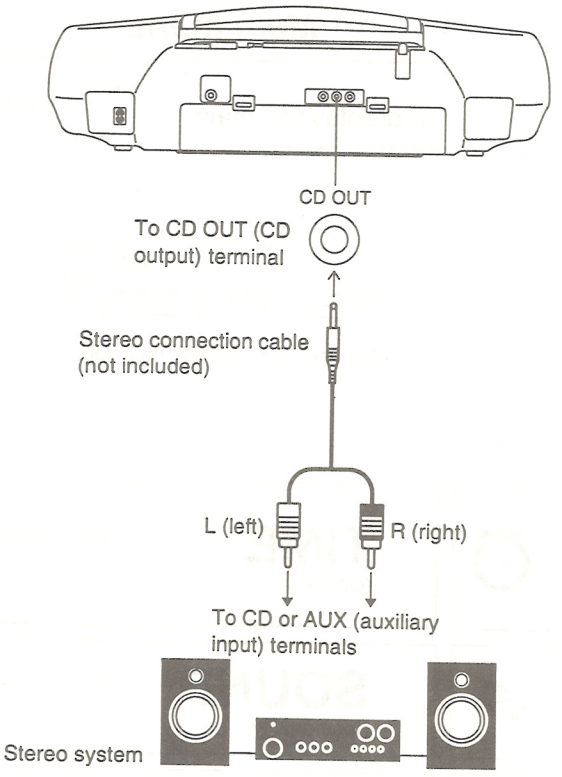

■ CD play

1. **Press □/CLEAR and then press ▷/II .**
2. **Adjust the volume and tone quality on your stereo system.**

Listening to records on this unit

Only a record player with built-in phono equalizer may be connected to this unit.

■ Connections

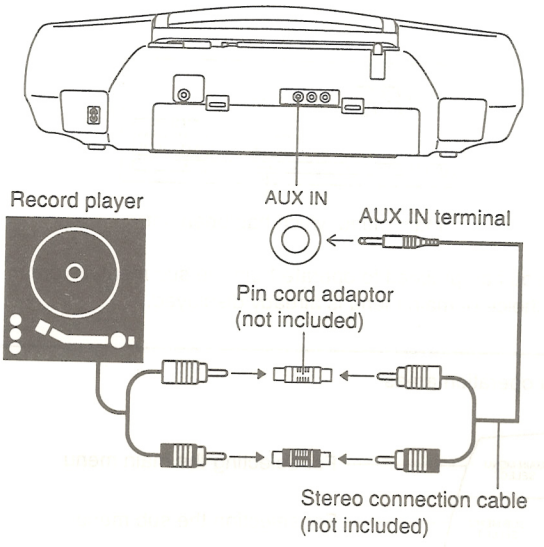

■ Record play

1. **Press AUX on the remote control.**
2. **Start operating your record player.**

■ Concerning the Remote Control

Remote control unit's operation range

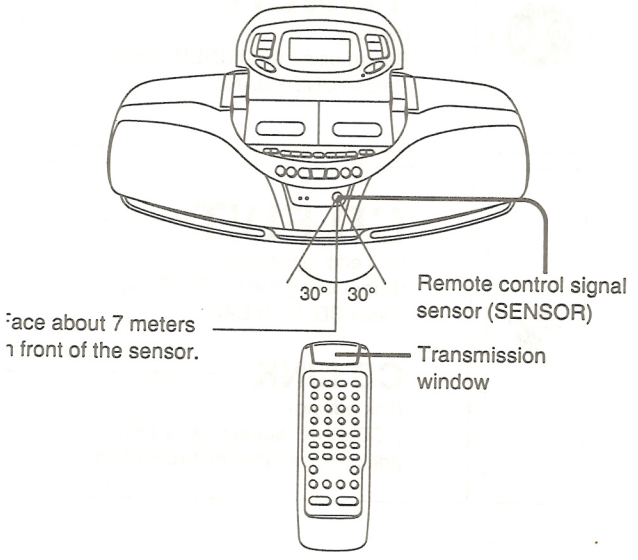

How to use the remote control unit properly

- Do not place obstacles between the remote control signal sensor and remote control unit.
- Do not expose the remote control signal sensor to direct sunlight or to the bright light of an invertor fluorescent light.
- Take care to keep the remote control signal sensor and the transmission window free from dust.

To prevent malfunctioning of the remote control unit:

- Do not disassemble or remodel the unit.
- Do not place heavy objects on top of it.
- Do not leave it where it will be exposed to direct sunlight.
- Do not spill beverages or other liquids over it.

Battery life

The battery life is about one year.
Although the battery life varies depending on how often the device is used, the batteries should be replaced, on average, about once every year.
The batteries should be replaced if commands from the remote control transmitter do not operate the unit even when the transmitter is held close to the front panel.

■ Menu Operations

Just 5 buttons enable you to activate a wide variety of functions.

Before menu operation

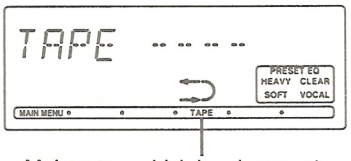

Main menu which has been set

- You can proceed to operate from the sub menu if your choice of main menu is already displayed.

Menu operation areas

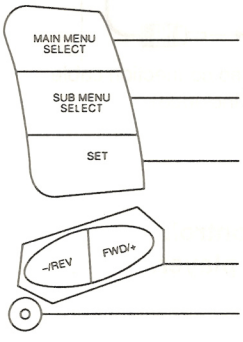

For selecting the main menu

For selecting the sub menu

For setting the menu selected

For selecting the setting menu

This flashes when the setting menu is selected.

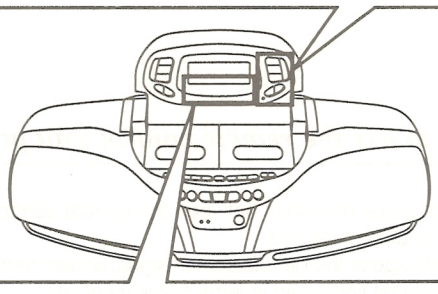

The sub menus contained in each of the main menus are shown here. This is handy when selecting the menu required for operation.

MAIN MENU	TIME	SOUND	TAPE	TUNER	CD EDIT
SUB MENU	TIMER SLEEP CLOCK	S-XBS TONE	C-RESET REV MODE DOLBY NR	TUNE MODE ST/MONO	AI/FIT MANUAL A·SPACE

MENU CONTROL SYSTEM

Reference

When you have made a mistake in operation:
Press MAIN MENU SELECT and start again from the beginning.

Note

Leaving too much time between operations may cause a menu operation to be completed automatically.
If this happens, start again from the beginning.

Operation key point

Main menu

To display the main menus, press:

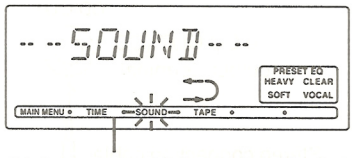

Main menus which can be selected

TIME
(clock)

SOUND
(tone quality)

TAPE
(tape)

TUNER
(radio)
Before using the TUNER menu:
Press TUNER/BAND.

CD EDIT
(CD edit-recording)
Before using the CD EDIT menu:
Press CD □/CLEAR.

CD LINK
(link editing)
("CD LINK" appears when link editing is set after edit-recording.)

Sub menu

To display the sub menus, press:

⬇

To set the sub menus, press:

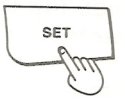

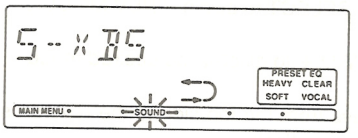

Setting menu

To display the setting menus, press:

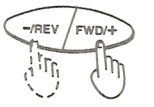

⬇

To set the setting menus, press:

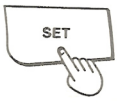

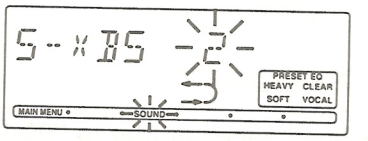

- TIMER (for setting the timer times) → Start time setting→End time setting
- SLEEP (for setting the sleep timer activation time) → Play time setting
- CLOCK (for setting the clock) → Present time setting

- S-XBS (for adjusting the deep-bass) → Level setting (0 to 10)
- TONE (for adjusting the treble) → Level setting (−5 to 5)

- C-RESET (for resetting the counter to "00.00")
- REV MODE (for selecting the reverse mode)
  - (Tape plays from top side to reverse side and then stops automatically)
  - (Tape plays repeatedly until stop button is pressed)
  - (Only one side of tape is played, and then tape stops automatically)
- DOLBY NR (for selecting the Dolby noise reduction setting)
  - DOLBY-ON (Dolby noise reduction ON)
  - DOLBY-OFF (Dolby noise reduction OFF)

- TUNE MODE (for selecting the tuning method)
  - PRESET (when listening to programmed stations)
  - MANUAL (when listening to stations which have not been programmed)
- ST/MONO (for selecting stereo or monaural reception; FM stations only)
  - FM STEREO (FM stereo reception)
  - FM MONO (FM monaural reception)

- AI/FIT (for recording all tracks) → Tape length setting
- MANUAL (recording favorite tracks) → Tape length setting→Recording track setting
- A-SPACE (for creating unrecorded blanks between programs)
  - SPACE-ON (unrecorded blank function set)
  - SPACE-OFF (unrecorded blank function not set)
- AI/FIT (for recording all tracks) → Recording track setting
- MANUAL (recording favorite tracks) → Recording track setting
- A-SPACE (for creating unrecorded blanks between programs)
  - SPACE-ON (unrecorded blank function set)
  - SPACE-OFF (unrecorded blank function not set)

Examples of menu operations

Deck section

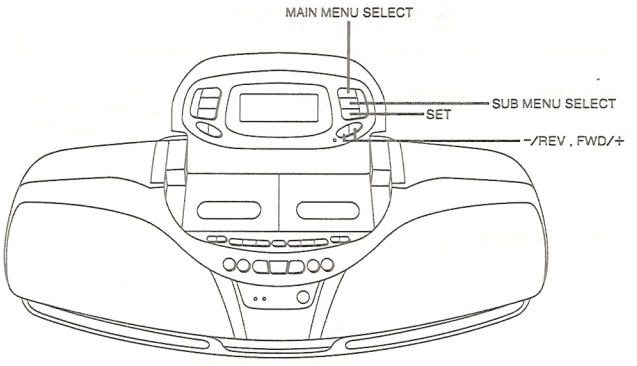

■ Resetting the linear tape counter to "00.00"

1. Press MAIN MENU SELECT to display "TAPE".
2. Press SUB MENU SELECT to display "C-RESET". Press SET.

Radio/CD sections

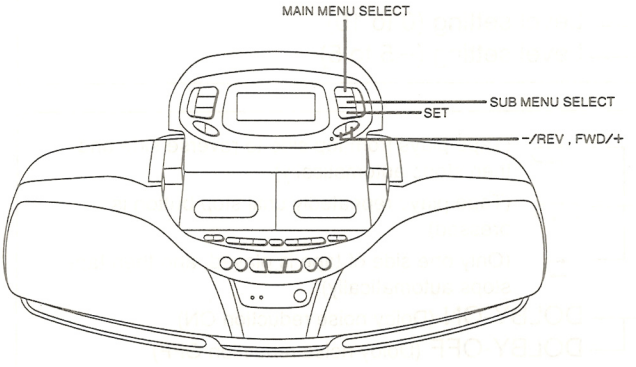

■ To listen to FM stereo broadcasts in the monaural mode

Noise levels are reduced by setting the sound to monaural.

1. Press MAIN MENU SELECT to display "TUNER".
2. Press SUB MENU SELECT to display "ST/MONO". Press SET.
3. Press –/REV or FWD/+ to display "FM MONO". Press SET.

To return to stereo reception, repeat the same steps and select "FM STEREO" in step 3.

■ Selecting the tuning method

There are two methods: preset and manual.

1. Press MAIN MENU SELECT to display "TUNER".
2. Press SUB MENU SELECT to display "TUNE MODE". Press SET.
3. Press –/REV or FWD/+ to select "PRESET" or "MANUAL". Press SET.

PRESET: For listening to a programmed station
MANUAL: For listening to a station which has not been programmed

■ Selecting the Dolby noise reduction setting

1. Press MAIN MENU SELECT to display "TAPE".
2. Press SUB MENU SELECT to display "DOLBY NR". Press SET.
3. Press –/REV or FWD/+ to select DOLBY-ON or DOLBY-OFF. Press SET.

DOLBY-ON: The Dolby noise reduction function is set.
DOLBY-OFF: The Dolby noise reduction function is released.

■ Selecting the reverse mode

1. Press MAIN MENU SELECT to display "TAPE".
2. Press SUB MENU SELECT to display "REV MODE". Press SET.
3. Press –/REV or FWD/+ to display the desired mode. Press SET.

⇆ : The tape plays from the top side to the reverse side and it then stops automatically.
↻⇆ : The tape plays repeatedly until the stop button is pressed. (When tapes have been loaded in both decks, both tapes are played continuously.)
⇆ : Only one side of the tape is played, and then the tape stops automatically.

■ Recording CD tracks with unrecorded blanks between the programs (Auto space function)

Unrecorded blanks lasting 4 or more seconds are required between programs in order for the tape program search function to operate properly.
When the auto space function is set, unrecorded blanks lasting about 4 seconds are automatically created between programs.
Set the function before proceeding with the automatic CD recording or menu edit-recording operation.

1. Press MAIN MENU SELECT to display "CD EDIT".
2. Press SUB MENU SELECT to display "A-SPACE". Press SET.
3. Press –/REV or FWD/+ to display "SPACE-ON".

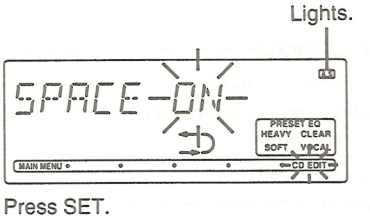

Press SET.

To release the function:
Repeat the same procedure and select "SPACE-OFF" in step 3.

Note

The auto space function does not work when recording without edit function.

■ Handling Precautions for Traverse Deck

The laser diode in the traverse deck (optical pickup) may break down due to potential difference caused by static electricity of clothes or human body.
So, be careful of electrostatic breakdown during repair of the traverse deck (optical pickup).

●Handling of traverse deck (optical pickup)

1. Do not subject the traverse deck (optical pickup) to static electricity as it is extremely sensitive to electrical shock.
2. To prevent the breakdown of the laser diode, an anti-static shorting pin is inserted into the flexible board (FPC board). When removing or connecting the shorting pin, finish the job in as short time as possible.
3. Take care not to apply excessive stress to the flexible board (FPC board).
4. Do not turn the variable resistor (laser power adjustment). It has already been adjusted.

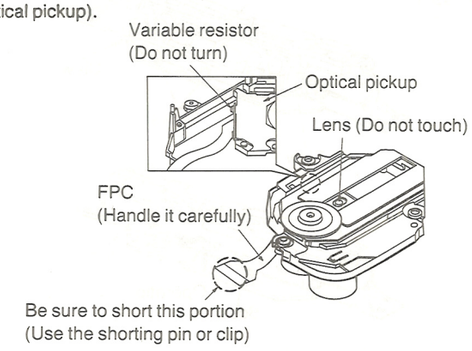

●Grounding for electrostatic breakdown prevention

1. Human body grounding
   Use the anti-static wrist strap to discharge the static electricity from your body.
2. Work table grounding
   Put a conductive material (sheet) or steel sheet on the area where the traverse deck (optical pickup) is placed, and ground the sheet.

Caution:
The static electricity of your clothes will not be grounded through the wrist strap. So, take care not to let your clothes touch the traverse deck (optical pickup).

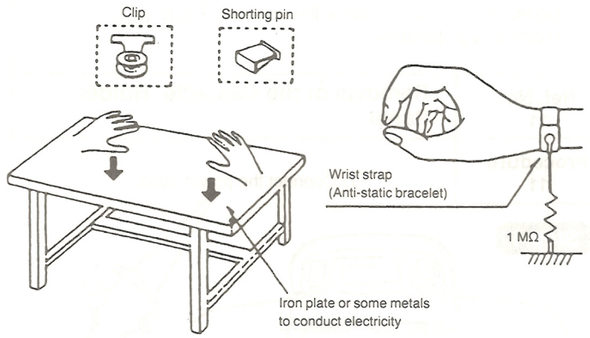

■ Disassembly Instructions

- Use a phillips screwdriver whose blade is 13 cm long and over to remove screws fixing the rear cabinet.

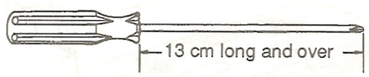

- Be sure to place the unit on soft cloth or similar material to prevent scratches when disassembling it.

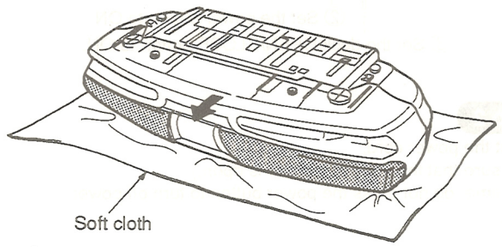

● Table for the Mechanism Main Parts Replacement

Item	Procedure	Page	Item	Procedure	Page
Friction gear (RXG0037)	Ref. No. 16 ↓ Friction gear replacement	Page 21→Page 31	Plunger (RSJ0003)	Ref. No. 14 ↓ Plunger replacement	Page 20→Page 35
Drive rack (RMQ0312A)	Ref. No. 16 ↓ Drive rack replacement	Page 21→Page 32	Belt (RDV108ZA)	Ref. No .16	Page 21
Leaf switch (RSH1A018-U, RSH1A019-U)	Ref. No. 14 ↓ Leaf switch replacement	Page 20→Page 33	Loading motor (REM0043)	Ref. No. 16 ↓ Remove 2 screws.	Page 21
Head (DECK1:RXQ0312) (DECK2:RXQ0316)	Ref. No. 15 ↓ Head replacement	Page 21→Page 34	Capstan motor (REM0036)	Ref. No.16 ↓ Remove 2 screws.	Page 21

Ref. No. 1	Removal of the Handle
Procedure 1	

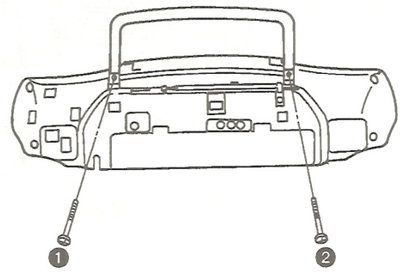

1. Remove 2 screws (❶, ❷).

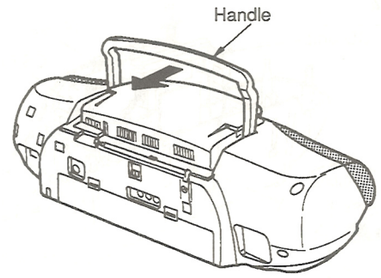

2. Remove the handle in the direction of the arrow.

Ref. No. 2	Removal of the Front Cabinet
Procedure 1→2	

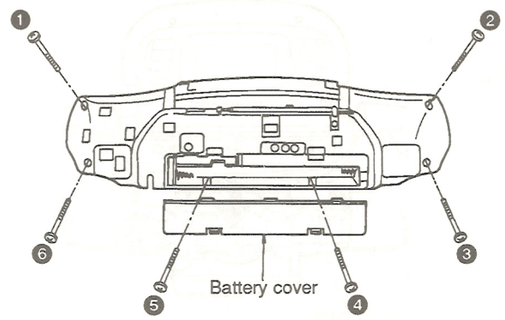

1. Remove the battery cover.
2. Remove 6 screws (❶~❻).

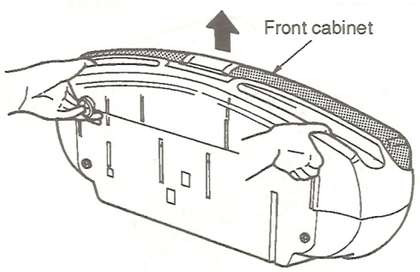

3. Remove the front cabinet in the direction of the arrow with having front side of this unit turned upwards.

Ref. No. 3	Removal of the Main Unit
Procedure 1→2→3	

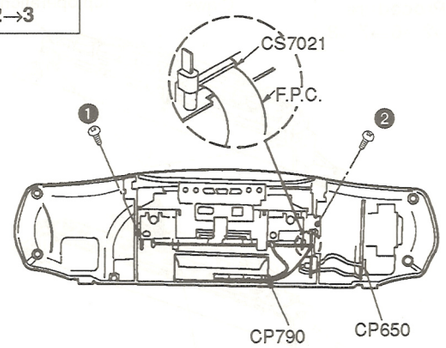

1. Remove 2 screws (❶, ❷).
2. Disconnect 2 connectors (CP650, CP790).
3. Disconnect the F.P.C. from the connector (CS7021).

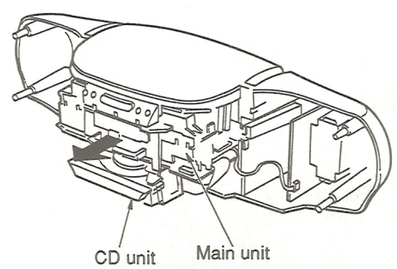

4. Pull out the main unit in the direction of the arrow.
Note: Main unit can be removed without removing the CD unit.

Ref. No. 4 — Removal of the CD Unit

Procedure 1→2→4

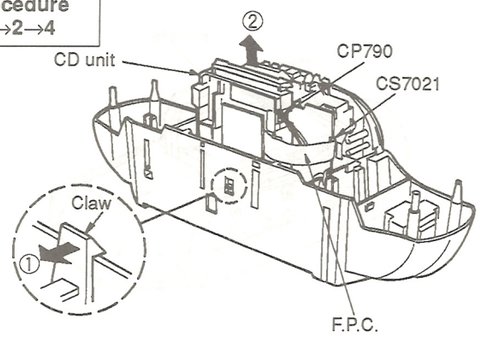

1. Disconnect the connector (CP790).
2. Disconnect the F.P.C. from the connector (CS7021).
3. Pull out the CD unit in the direction of the arrow ② with releasing the claw in the direction of the arrow ①.

Ref. No. 5 — Removal of the Sensor P.C.B.

Procedure 1→2→5

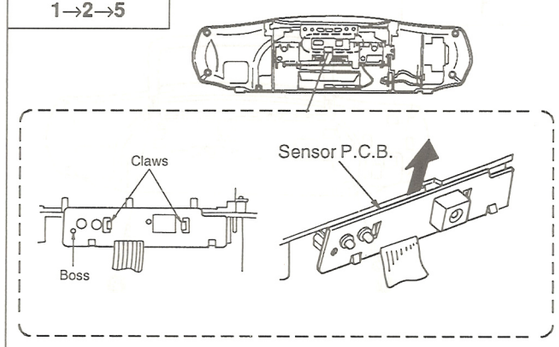

1. Release 2 claws and remove the sensor P.C.B. from the boss with inclining the P.C.B..
2. Remove the sensor P.C.B. in the direction of the arrow.

Ref. No. 6 — Removal of the Inner Panel

Procedure 1→2→6

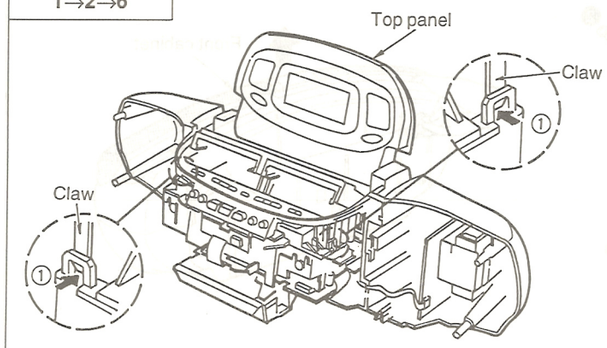

1. Open the top panel.
2. Release 2 claws in the direction of the arrows ①.

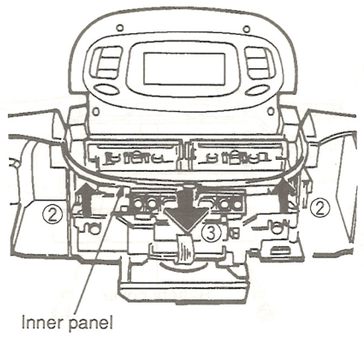

3. Lift up the front side of the inner panel slightly in the direction of the arrows ② and pull out in the direction of the arrow ③.

Ref. No. 7 — Removal of the Button Chassis

Procedure 1→2→6→7

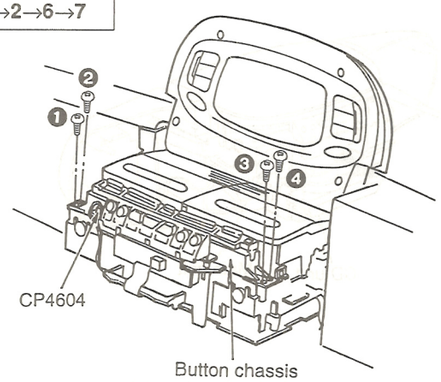

1. Remove 4 screws (❶~❹).
2. Release the connector (CP4604).

Ref. No. 8 — Removal of the Operation P.C.B. (1)

Procedure 1→2→6→7→8

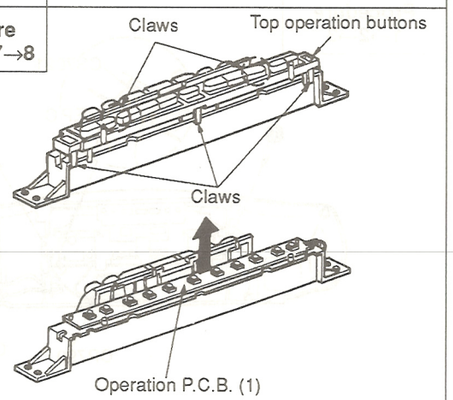

1. Release 5 claws and remove the top operation buttons.
2. Remove the operation P.C.B. (1) in the direction of the arrow.

Ref. No. 9 — Removal of the Operation P.C.B. (2)

Procedure 1→2→6→7→9

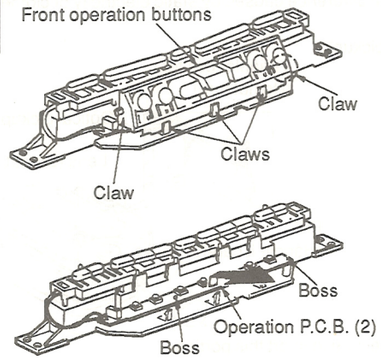

1. Release 5 claws and remove the front operation buttons.
2. Release 2 bosses and remove the operation P.C.B. (2) in the direction of the arrow.

Ref. No. 10 — Removal of the Tweeter P.C.B. (L)/(R)

Procedure 1→2→6→7→10

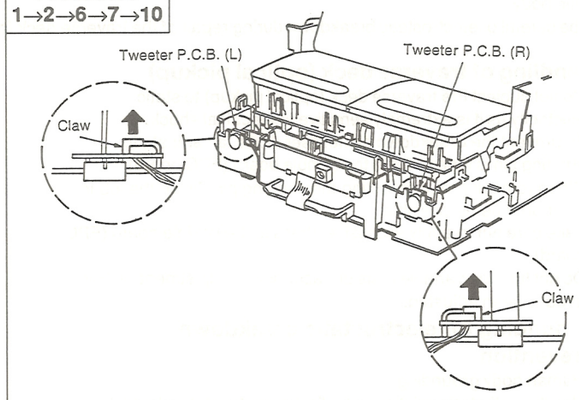

● Release each claw in the direction of the arrows.

Ref. No. 11 — Removal of the Cassette Holder Panel

Procedure 11

In case that the power source is faulty or the cassette holder cannot be opend by electrical means, open the cassette holder by the method shown below:

Step 1

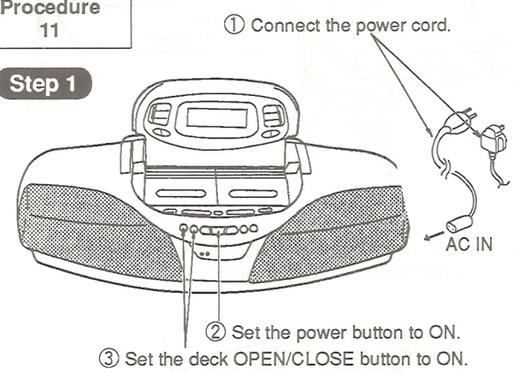

Step 2

Pull out the power cord.
(Make sure that the cassette holder is open.)
At this time, do not press the power button to turn off power supply.

Step 3

Remove the cassette holder panel by pulling it in the direction of the arrows.

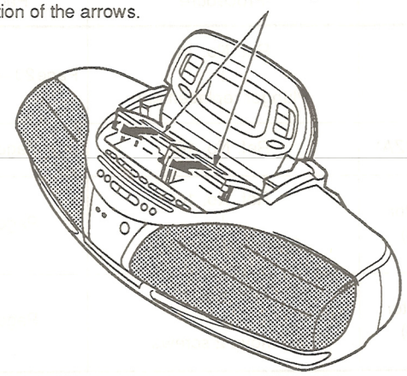

1. Referring to "Removal of the Inner Panel" (Ref. No.6), remove the inner panel.

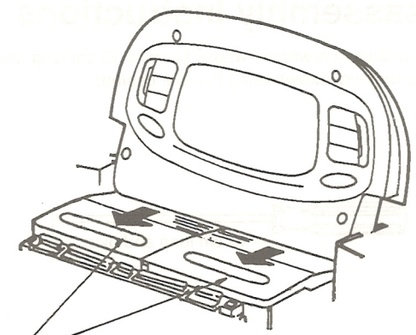

2. Remove the cassette holder panel by pulling it in the direction of the arrows.

Ref. No. 12	Removal of the Mechanism Unit
Procedure 11→1→2 →6→12	**Note: When removing the mechanism unit, make sure that the cassette holder is open. Particularly, take care that removing the mechanism unit when the cassette holder of DECK 1 is closed will get the cassette holder spring to hit and hurt the top panel.**

Step 1
Make sure that the cassette holder is open, and then remove 6 screws (❶~❻).

Step 2
Lift the mechanism unit while keeping it in horizontal position.
As the mechanism control P.C.B. and main P.C.B. connectors are demounted together, lifting the mechanism unit applies load.

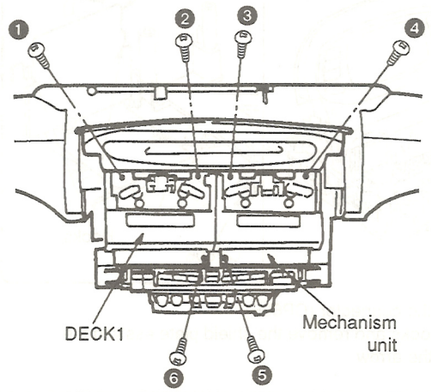

REFERENCE

- When the mechanism unit is raised with the cassette holder closed,

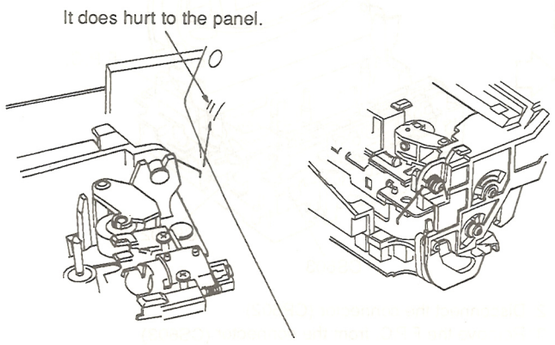

- If the cassette holder is open then,

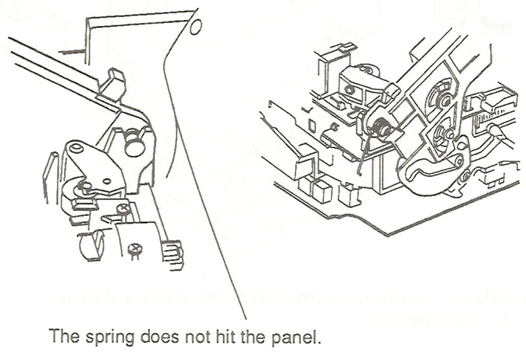

- **In case that power supply cannot be turned on or the cassette holder of the set in use cannot be opened by electrical means, open it by the following method:**

Step 1
Slide the drive rack in the direction of the arrow.
(The cassette holder opens a little.)

Step 2
Fully open the cassette holder by hand.

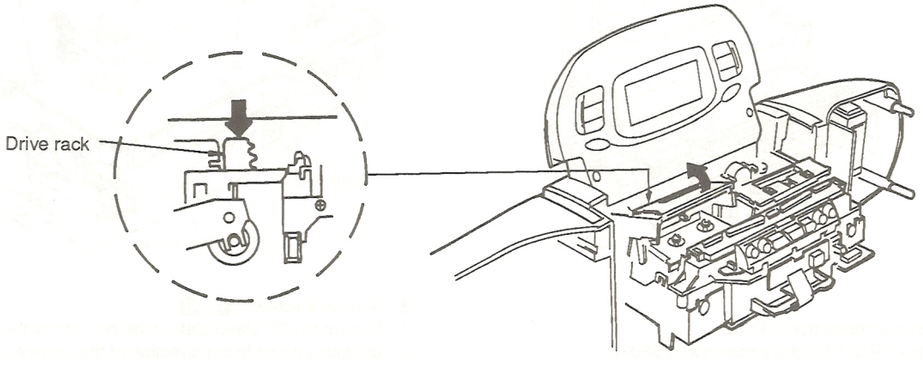

Ref. No. 13	Removal of the Mechanism Control P.C.B.
Procedure 1→2→6→12 →13	

Step 1
Remove 4 screws (❶~❹).

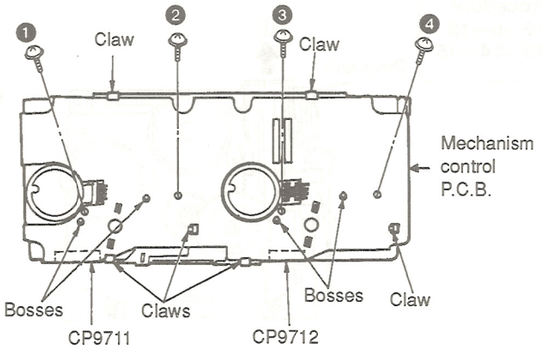

Step 4
Putting a soldering iron securely on the capstan motor terminal and raising the P.C.B. in the direction of the arrows, unsolder connected part.
(For both DECK 1 and DECK 2, remove the capstan motor terminals.)

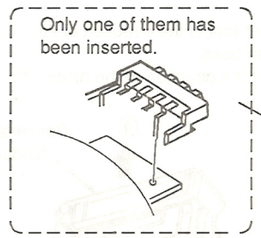

Step 3
Remove claws and have the P.C.B. rise a little.

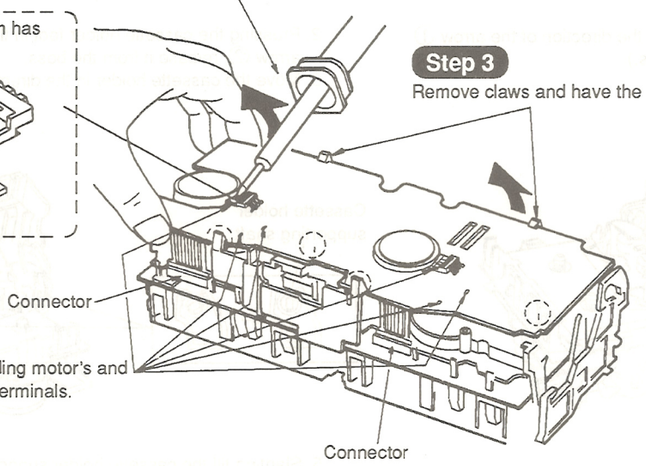

Step 2
Unsolder the loading motor's and capstan motor's terminals.

Step 5
Pulling up the entire P.C.B., remove 4 claws ◌ and 2 connectors.

Ref. No. 14	Removal of the Coupling Chassis
Procedure 1→2→6→12 →13→14	

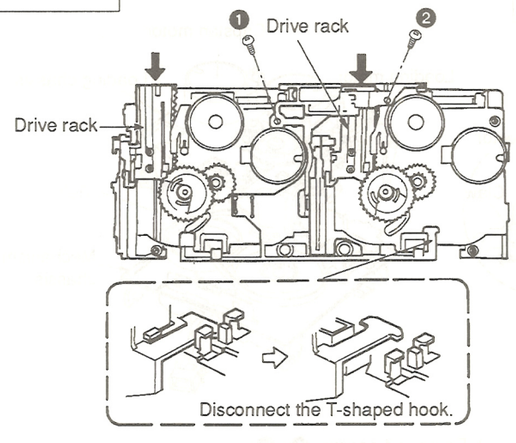

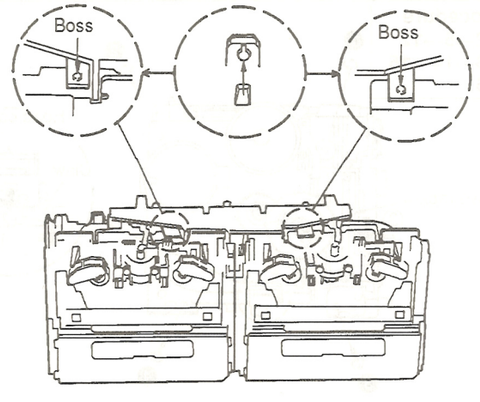

1. Slide 2 drive racks fully in the direction of the arrows. (The cassette holder closes.)
2. Remove 2 screws (❶, ❷).
3. Disconnect the T-shaped hook of the chassis.
4. Release 2 bosses.

Ref. No. 15 — Removal of the Cassette Holder

(For reassembly, see page 34.)

Procedure
1→2→6→12
→13→14→15

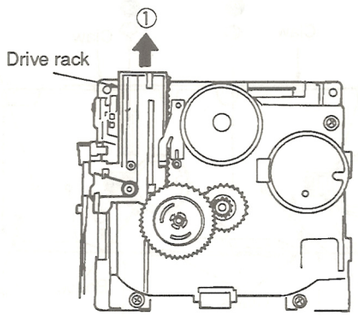

1. Slide the drive rack fully in the direction of the arrow ①. (The cassette holder opens.)

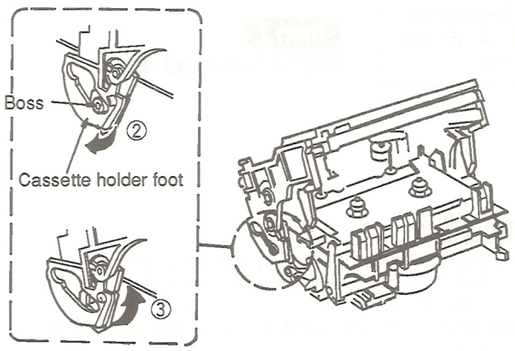

2. Pressing the cassette holder foot in the direction of the arrow ②, release it from the boss.
3. Move the cassette holder in the direction of the arrow ③.

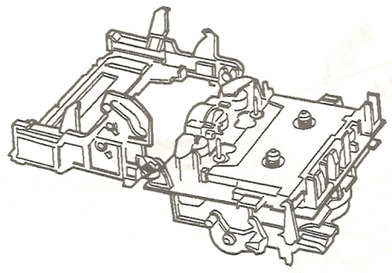

4. Open the cassette holder.

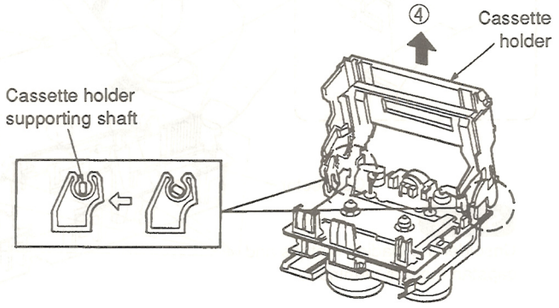

5. Slanting till the cassette holder supporting shaft is at the angle pictured above, draw out in the direction of the arrow ④. (to such an extent that the mechanism makes a right angle with the cassette holder.)

Ref. No. 16 — Removal of the Loading Chassis

Procedure
1→2→6→12
→13→14→15
→16

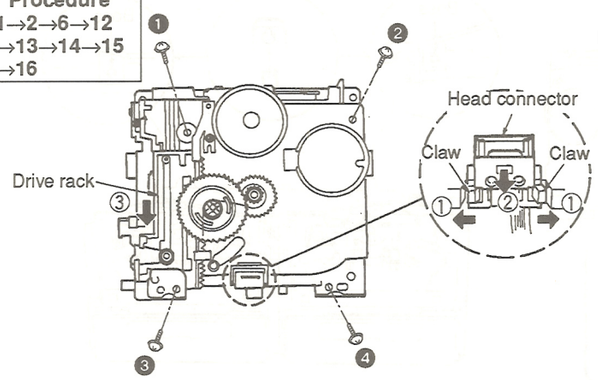

1. Widen the space between the 2 claws as shown by the arrows ①, and then remove the head connector in the direction of the arrow ②.
2. Slide the drive rack fully in the ③.

Note: The drive rack slides heavily for it is in mesh with the motor through the friction gear.

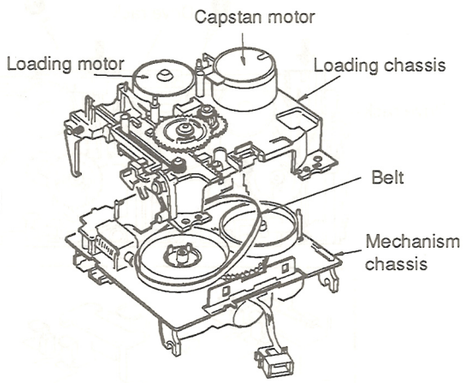

3. Remove 4 screws (❶~❹).
4. Separate the loading chassis from the mechanism chassis.
5. Remove the belt.

Note: Use a pair of tweezers or an equivalent tool not to stain the belt with grease or hand sweat.

Ref. No. 17 — Removal of the Shield Plate Ass'y

Procedure
1→2→6→12→17

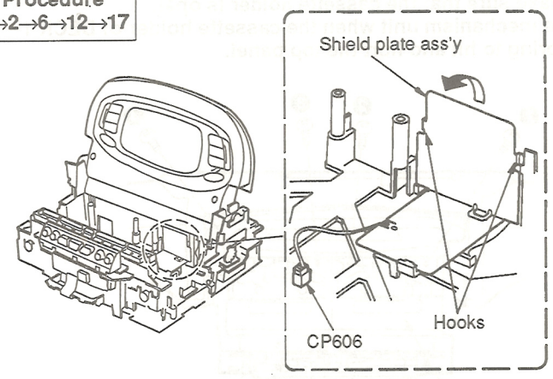

1. Disconnect the connector (CP606).
2. Release 2 hooks and remove the shield plate ass'y in the direction of the arrow.

Ref. No. 18 — Removal of the Top Panel Unit

Procedure
1→2→3→6→12
→17→18

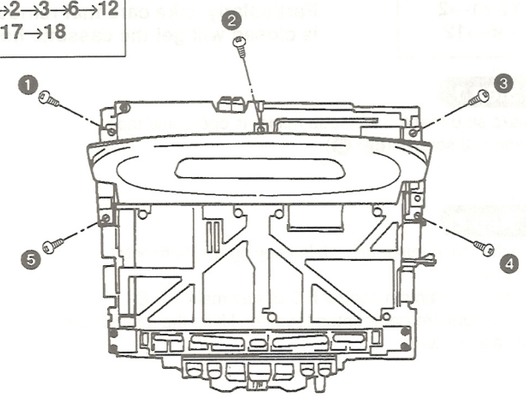

1. Remove 5 screws (❶~❺).

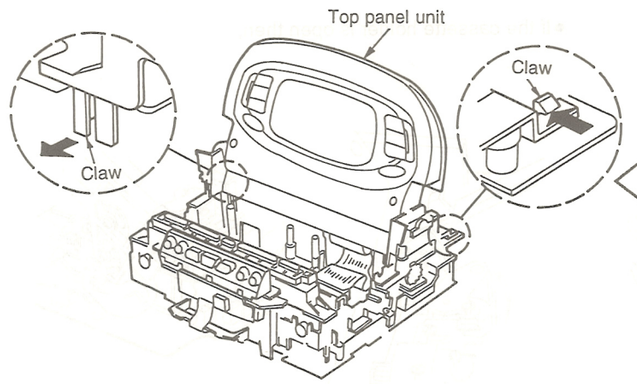

4. Release 2 claws in the direction of the arrows and lift up the top panel unit.

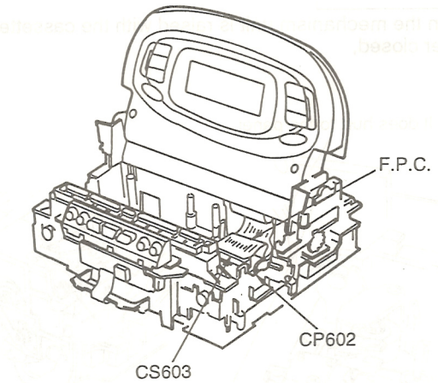

2. Disconnect the connector (CP602).
3. Remove the F.P.C. from the connector (CS603).

Ref. No. 19 — Removal of the Main P.C.B.

Procedure
1→2→3→6→12
→17→19

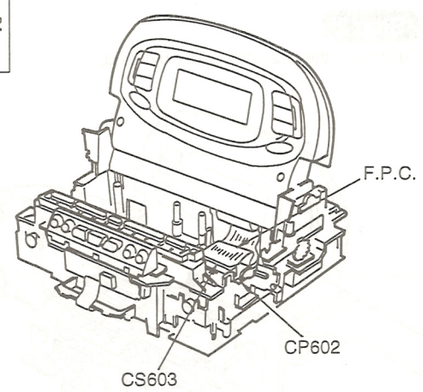

1. Disconnect the connector (CP602).
2. Remove the F.P.C. from the connector (CS603).

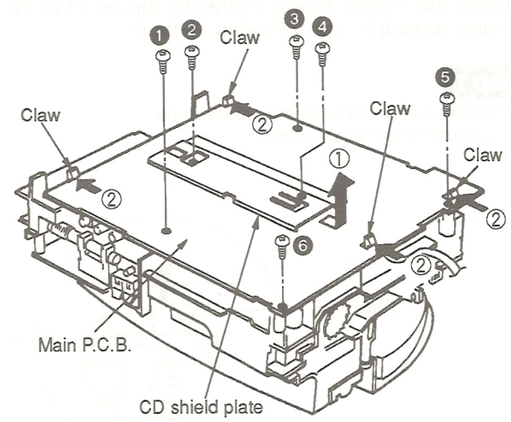

3. Remove 6 screws (❶~❻).
4. Remove the CD shield plate in the direction of the arrow ①.
5. Release 4 claws in the direction of the arrows ②.

Ref. No. 20 — Removal of the Power IC

Procedure
1→2→3→6→12
→17→19→20

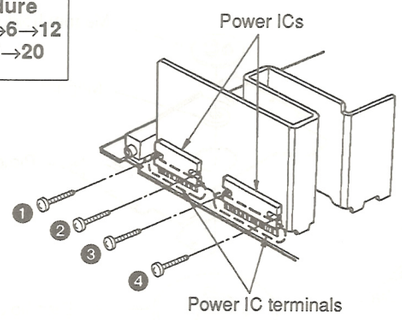

1. Unsolder 2 power IC terminals.
2. Remove 4 screws (❶~❹).

Note: When mounting the power IC, apply silicon compound (RFKX0002, or equivalent terminal diffusion material) to the rear side of the power IC.

Ref. No. 21 — Removal of the Motor Unit

Procedure
1→2→3→6→12
→17→18→21

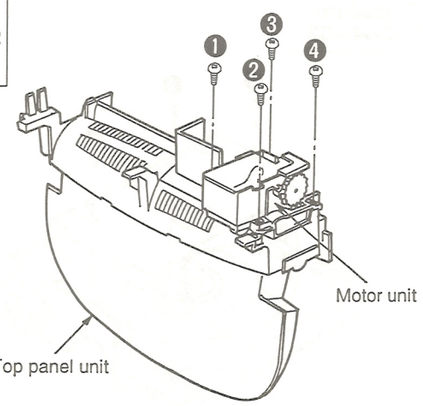

●Remove 4 screws (❶~❹).

Ref. No. 22 — Disassembly of the Motor Unit

Procedure
1→2→3→6→12
→17→18→21→22

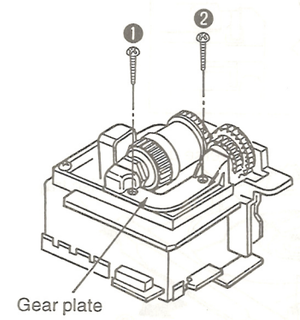

1. Remove 2 screws (❶, ❷).
2. Remove the gear plate.

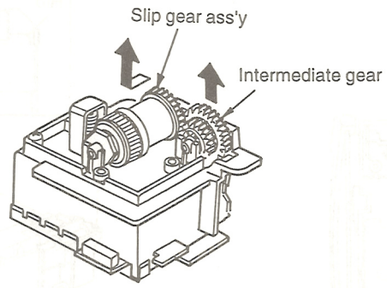

3. Remove the intermediate gear and slip gear ass'y in the direction of the arrows.

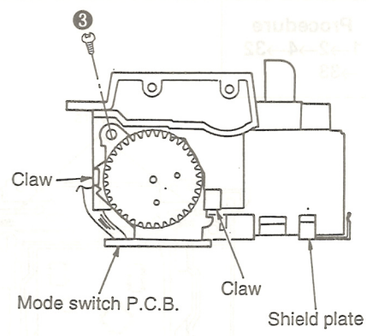

4. Remove the shield plate.
5. Remove the screw (❸).
6. Release 2 claws and remove the mode switch P.C.B..

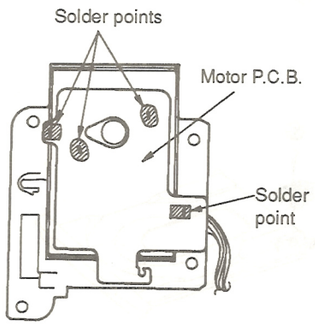

7. Unsolder 4 points and remove the motor P.C.B..

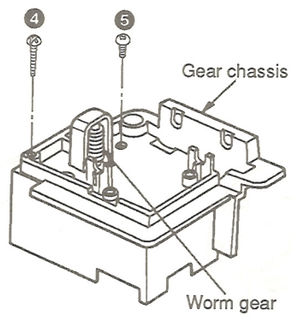

8. Remove 2 screws (❹, ❺).
9. Remove the gear chassis and worm gear.

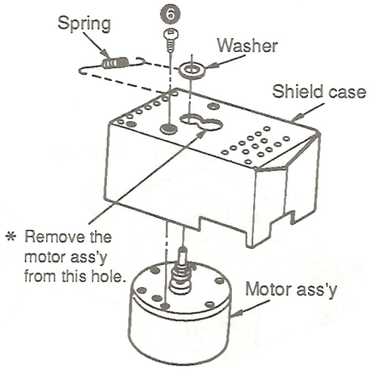

10. Remove the washer and spring.
11. Remove the screw (❻) and remove the motor ass'y from the shield case.

Ref. No. 23 — Removal of the Tuner P.C.B.

Procedure
1→2→3→6→12
→17→18→23

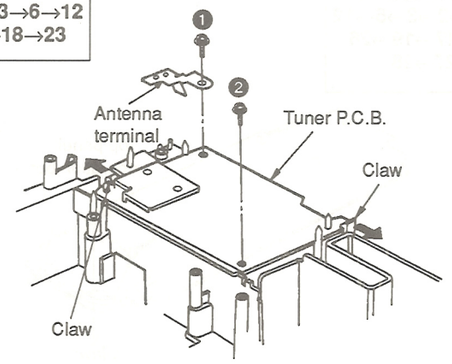

1. Remove 2 screws (❶, ❷).
2. Remove the antenna terminal.
3. Release 2 claws in the direction of the arrows.

Ref. No. 24 — Removal of the Connection P.C.B.

Procedure
1→2→3→6→12
→17→19→24

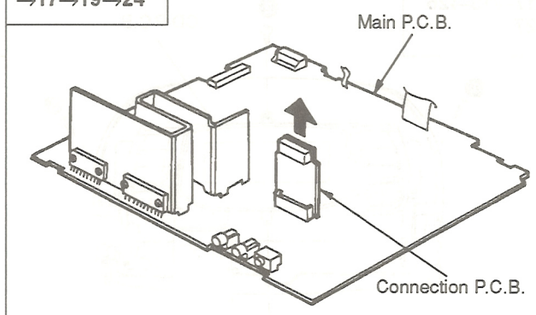

●Remove the connection P.C.B. in the direction of the arrow.

Ref. No. 25 — Removal of the Top Panel Table

Procedure
1→2→3→6→12
→17→18→25

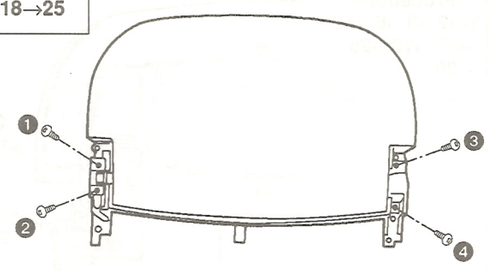

1. Remove 4 screws (❶~❹).

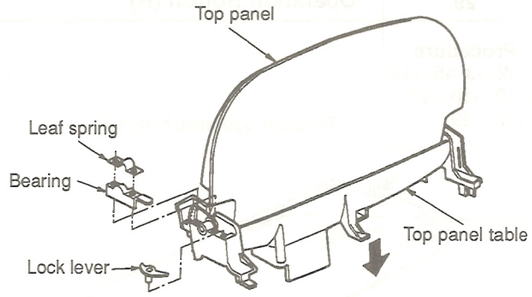

2. Remove the leaf spring, bearing and lock lever.
3. Remove the top panel.

Ref. No. 26 — Removal of the Top Panel Inside Panel

Procedure
1→2→3→6→12
→17→18→26

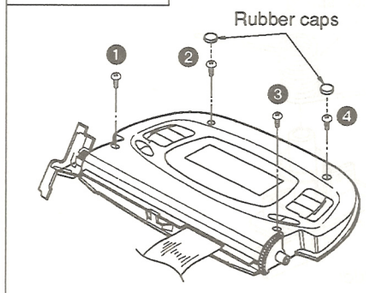

1. Remove 2 rubber caps.
2. Remove 4 screws (❶~❹).

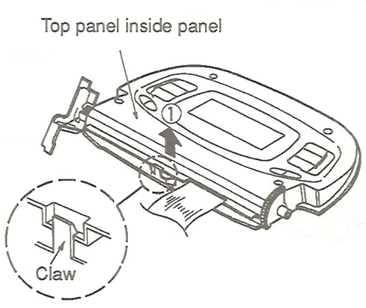

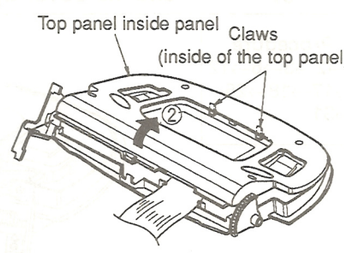

3. Release the claw and lift up the top panel inside panel in the direction of the arrow ① to be half-open.
4. Open the top panel inside panel in the direction of the arrow ② and release 2 claws inside the top panel.

Ref. No. 27	Removal of the LCD P.C.B.

Procedure
1→2→3→6→12→17→18→26→27

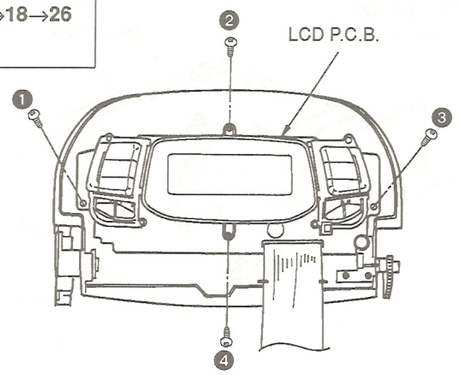

● Remove 4 screws (❶~❹).

Ref. No. 28	Removal of the Top Panel Operation Button (L)

Procedure
1→2→3→6→12→17→19→26→27→28

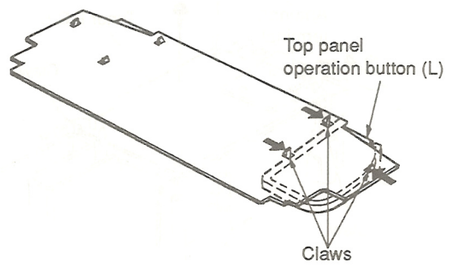

● Release 3 claws in the direction of the arrows.

Ref. No. 29	Removal of the Top Panel Operation Button (R)

Procedure
1→2→3→6→12→17→18→26→27→29

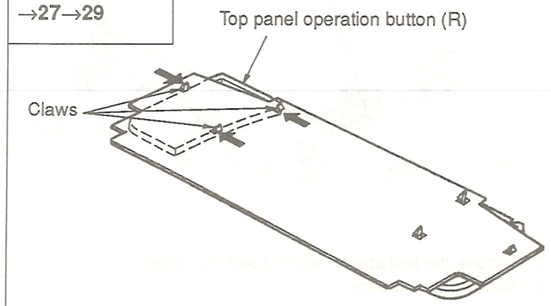

● Release 3 claws in the direction of the arrows.

Ref. No. 30	Removal of the Drive Gear

Procedure
1→2→3→6→12→17→18→26→30

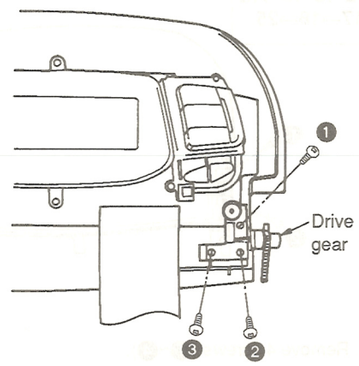

● Remove 3 screws (❶~❸).

Ref. No. 31	Removal of the Top Panel Holder and the Cover Open Spring

Procedure
1→2→3→6→12→17→18→26→31

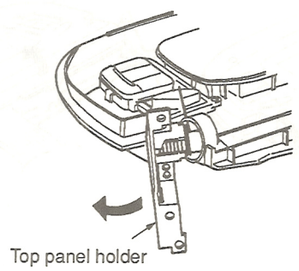

1. Remove the top panel holder in the direction of the arrow.

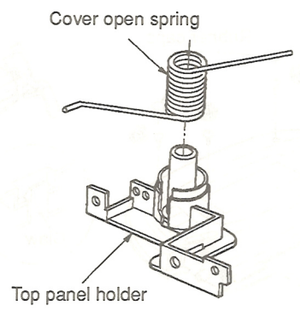

2. Remove the cover open spring from the top panel holder.

Ref. No. 32	Removal of the Disc Holder

Procedure
1→2→4→32

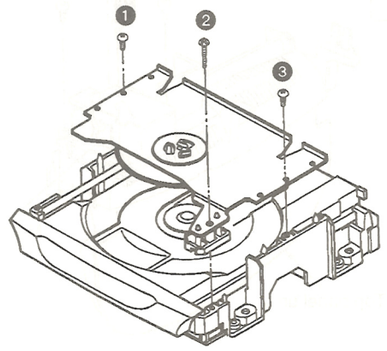

1. Remove 3 screws (❶~❸).

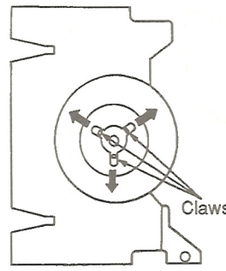

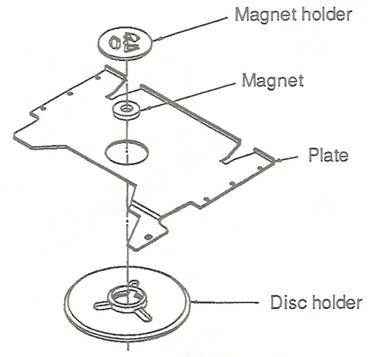

2. Release 3 claws in the direction of the arrows.
3. The disc holder is disassemblied as shown in the figure above.

Ref. No. 33	Removal of the Disc Tray

Procedure
1→2→4→32→33

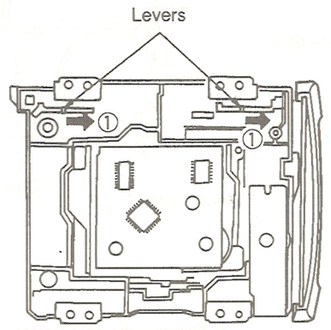

1. Slide 2 levers fully in the direction of the arrows ①. (Traverse unit in moved down.)

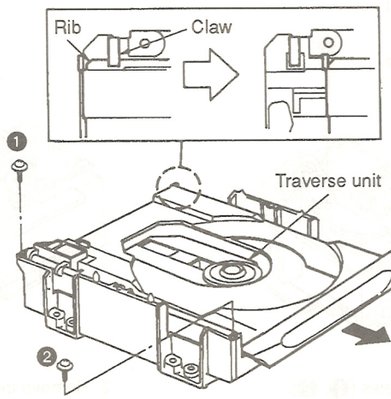

2. Move the disc tray slightly in the direction of the arrow ② and release the rib and claw.
3. Remove 2 screws (❶, ❷).

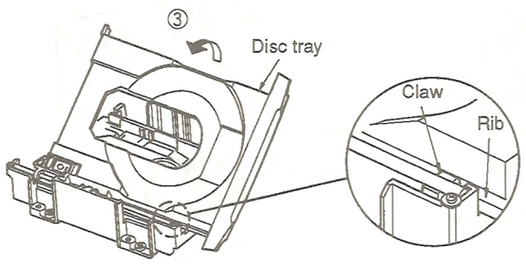

4. Lift up the disc tray in the direction of the arrow ③.
5. Release the rib from the claw of the chassis.

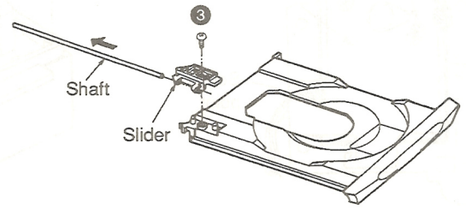

6. Remove the screws (❸).
7. Remove the slider and the shaft.

Ref. No. 34 — Removal of the CD P.C.B.

Procedure
1→2→4→34

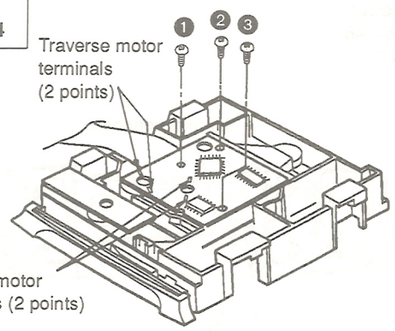

1. Remove 3 screws (❶~❸).
2. Unsolder 2 spindle motor terminals.
3. Unsolder 2 traverse motor terminals.

Slide the top of the connector in the direction of the arrows ① and disconnect the flexible cable in the direction of the arrow ②.

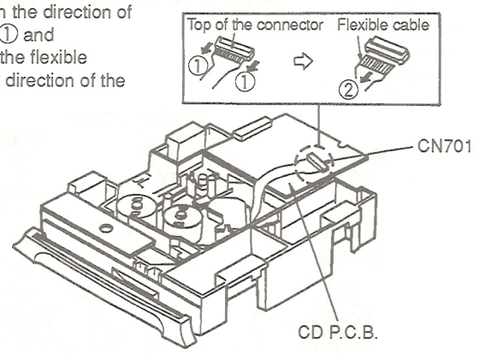

4. Disconnect the flexible cable (CN701).
Note: Insert the shorting pin into the flexible cable for optical pickup.
<Refer to "Handling Precautions for Traverse Deck" on page11.>

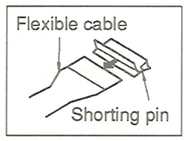

Ref. No. 35 — Removal of the Loading Motor P.C.B. and the Loading Motor

Procedure
1→2→4→32
→33→35

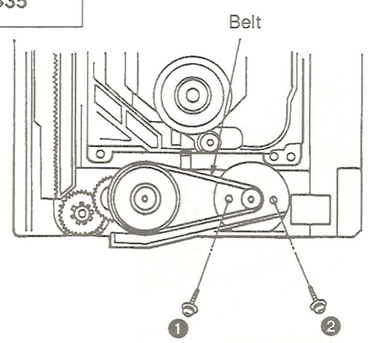

1. Remove the belt.
2. Remove 2 screws (❶, ❷).

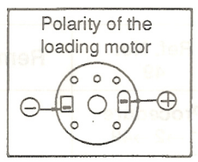

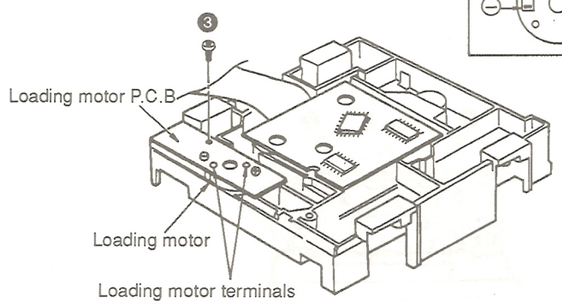

3. Remove the screw (❸).
4. Unsolder 2 loading motor terminals.

Ref. No. 36 — Removal of the Traverse Deck

Procedure
1→2→4→32
→33→34→36

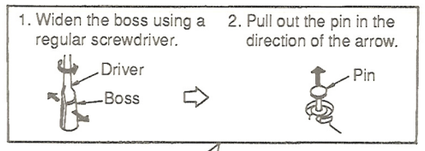

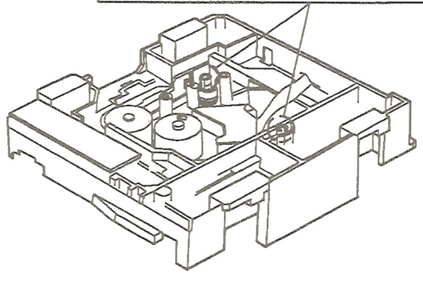

1. Remove 2 pins.

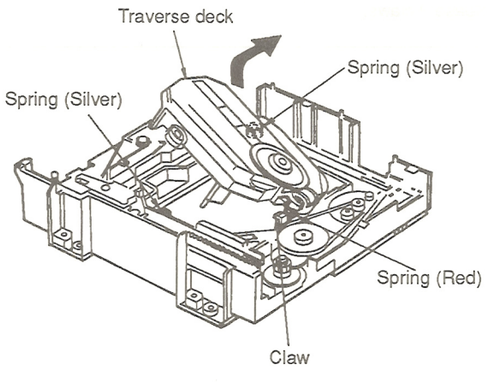

2. Remove the traverse deck in the direction of the arrow with releasing the claw.
Note: Since 3 springs can be also removed together with the traverse deck, be careful not to lose them.

Ref. No. 37 — Removal of the Lock Lever

Procedure
1→2→4→32
→33→34→36
→37

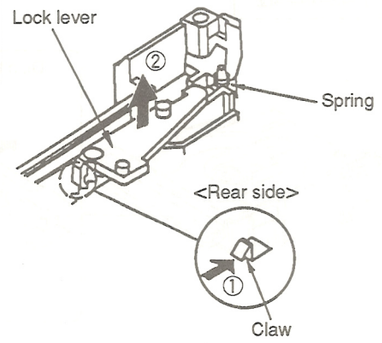

1. Remove the spring.
2. Push the claw in the direction of the arrow ① and lift up the lock lever in the direction of the arrow ②.

Ref. No. 38 — Removal of the Converter Lever

Procedure
1→2→4→32
→33→34→36
→37→38

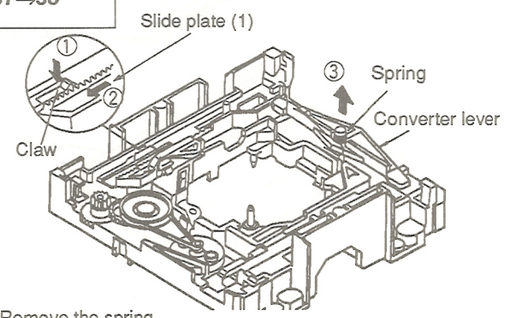

1. Remove the spring.
2. Push the claw in the direction of the arrow ① and slide the slide plate (1) in the direction of the arrow ②.
3. Lift up the converter lever in the direction of the arrow ③.

Ref. No. 39 — Removal of the Traverse Chassis

Procedure
1→2→4→32
→33→34→36
→37→38→39

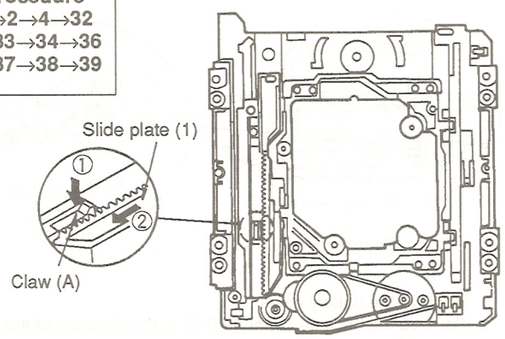

1. Push the claw (A) in the direction of the arrow ① and slide the slide plate (1) in the direction of the arrow ②.

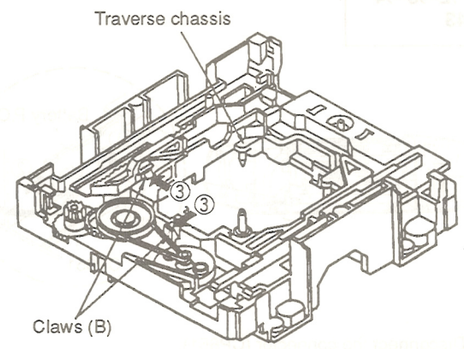

2. Push 2 claws (B) in the direction of the arrows ③ and lift up the traverse chassis.

Ref. No. 40 — Removal of the Slide Plates (1)/(2)

Procedure
1→2→4→32
→33→34→36
→37→38→39
→40

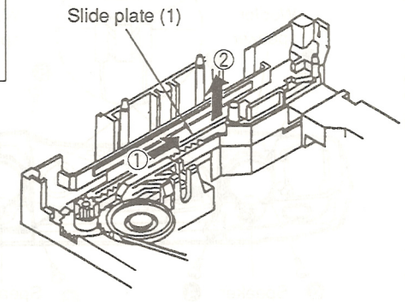

■ Removal of the slide plate (1)

- Slide the slide plate (1) fully in the direction of the arrow ① and lift up in the direction of the arrow ②.

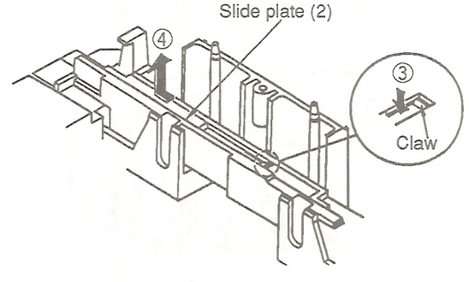

■ Removal of the slide plate (2)

- Push the claw in the direction of the arrow ③ and remove the slide plate (2) in the direction of the arrow ④.

Ref. No. 41 — Removal of the Drive Rack

Procedure
1→2→4→32→33→41

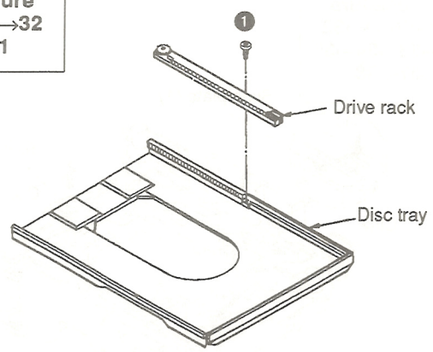

● Remove the screw (❶).

Ref. No. 42 — Removal of the Disc Tray Ornament

Procedure
1→2→4→42

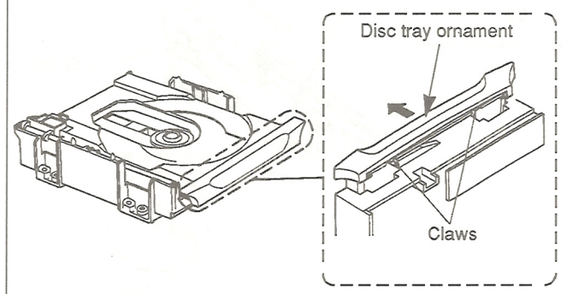

● Release 2 claws and remove the disc tray ornament in the direction of the arrow.

Ref. No. 43 — Removal of the Battery P.C.B.

Procedure
1→2→3→4→43

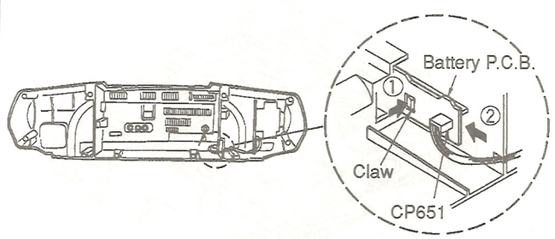

1. Disconnect the connector (CP651).
2. Remove the battery P.C.B. in the direction of the arrow ② with pushing the claw in the direction of the arrow ①.

Ref. No. 44 — Removal of the Back-up Battery P.C.B.

Procedure
44

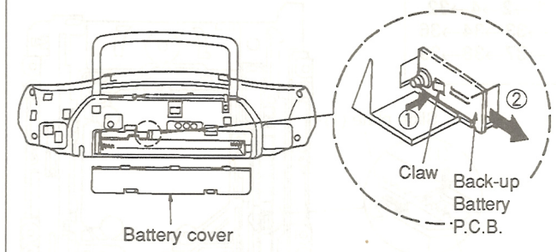

1. Remove the battery cover.
2. Remove the back-up battery P.C.B. in the direction of the arrow ② with pushing the claw in the direction of the arrow ①.

Ref. No. 45 — Removal of the Power P.C.B.

Procedure
1→2→3→4→45

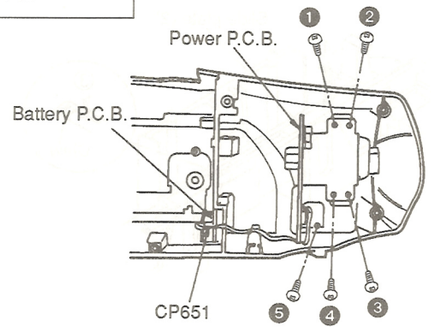

1. Remove 5 screws (❶~❺).
2. Disconnect the connector (CP651) on the battery P.C.B..

Ref. No. 46 — Removal of the Woofer Speaker

Procedure
1→2→46

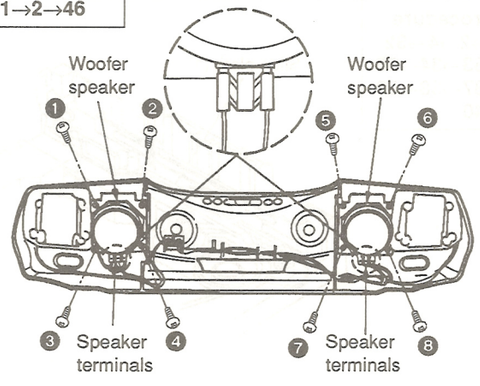

1. Remove 8 screws (❶~❽).
2. Pull out 4 speaker terminals.

Ref. No. 47 — Removal of the Tweeter Speaker

Procedure
1→2→47

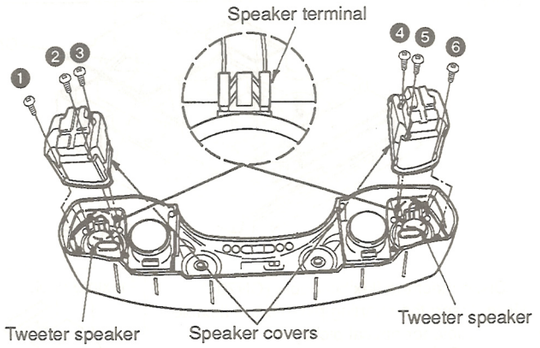

1. Remove 6 screws (❶~❻).
2. Remove 2 speaker covers.
3. Pull out 2 speaker terminals.

Ref. No. 48 — Removal of the Speaker Connector

Procedure
1→2→48

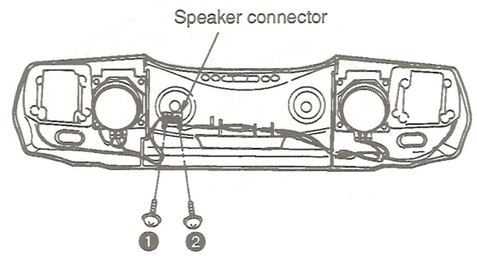

● Remove 2 screws (❶, ❷).

Ref. No. 49 — Removal of the Display Panel

Procedure
1→2→49

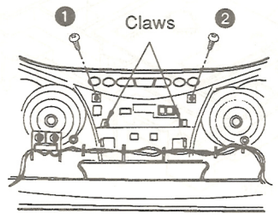

1. Remove 2 screws (❶, ❷).
2. Release 2 claws.

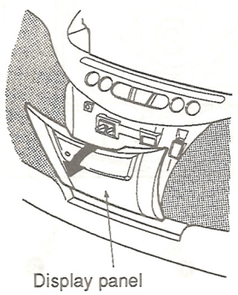

3. Remove the display panel in the direction of the arrow.

■ Replacement of Main Parts

Friction gear replacement

Step 1 Referring to "Disassembly Instructions" (Ref. No. 16), remove the loading chassis.

Step 2 Widen 2 inter-claw space and pull out the friction gear.

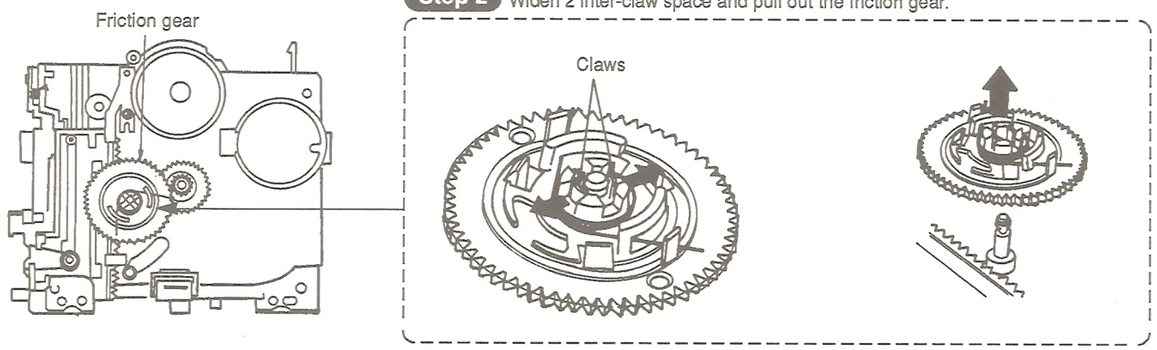

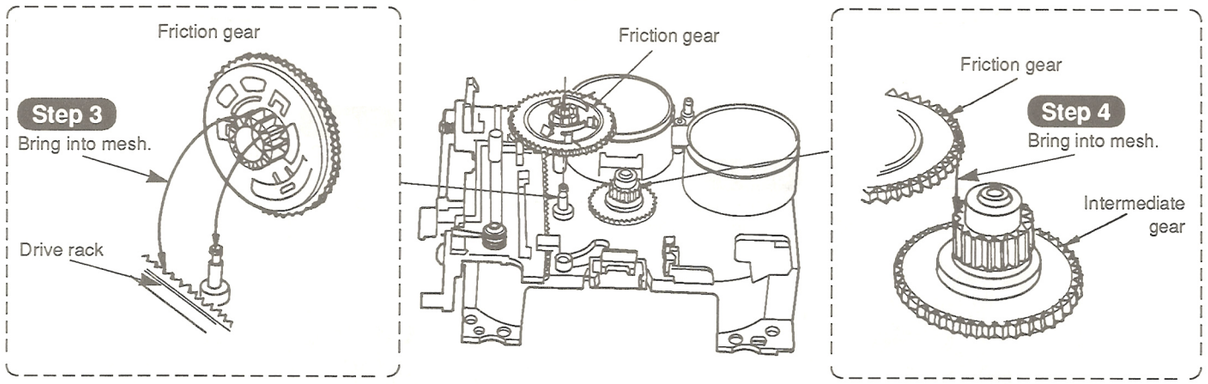

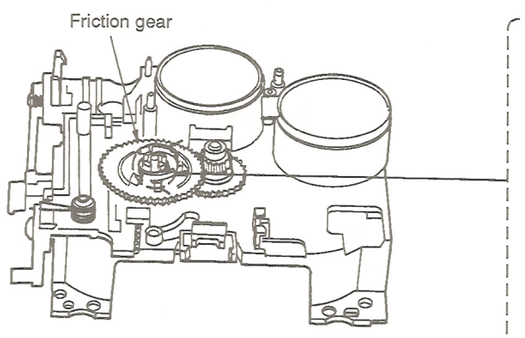

Step 5
Claws should be locked in the concave section.

Drive rack replacement

Step 1 Referring to "Disassembly Instructions" (Ref No.16), remove the loading chassis.

Step 2 Referring to "Friction Gear Replacement" (preceding page), remove the friction gear.

Step 3
Remove the screw.

Step 4
Remove the leaf spring.

Step 5
Slide the drive rack fully in the direction of the arrow.

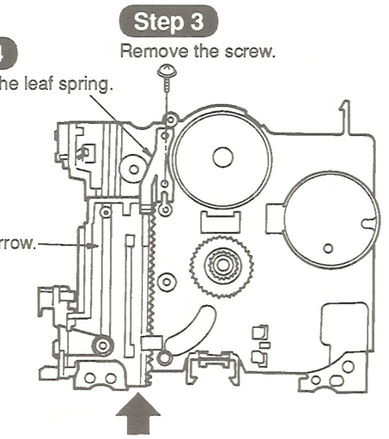

Step 6
Inserting a screwdriver in the hole, push it in till the claw is out.

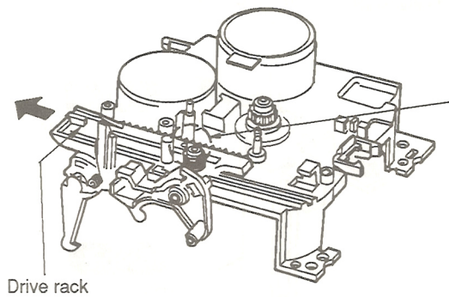

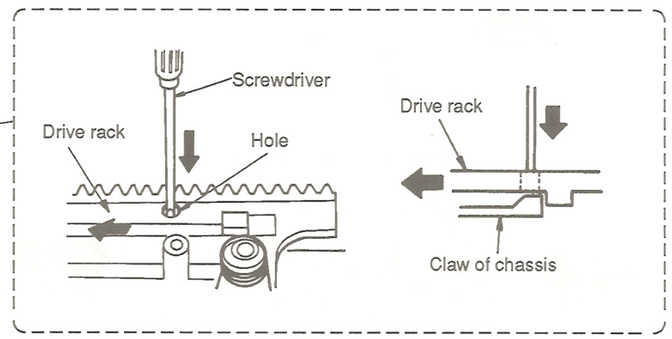

Step 7
Pushing the screwdriver in, slide the drive rack in the direction of the arrow and remove it.

Step 8
Remove the spring.

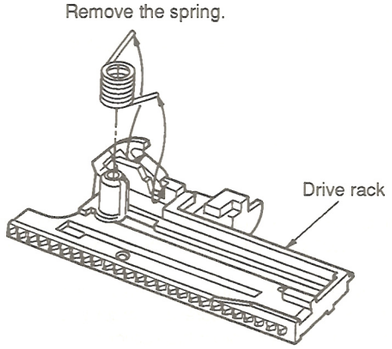

Step 9
Remove the lever by moving it as shown by arrows ①→②.

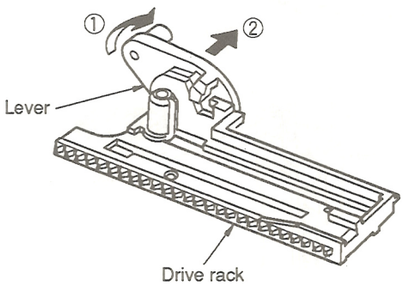

Step 10
Adjusting hooks (A) and (B) of the chassis to notches (A) and (B) of the drive rack, carry out mounting.

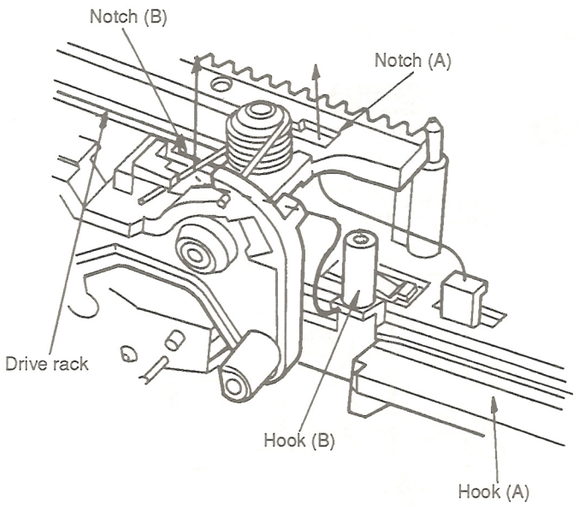

Step 12
Mount the leaf spring with the screw.

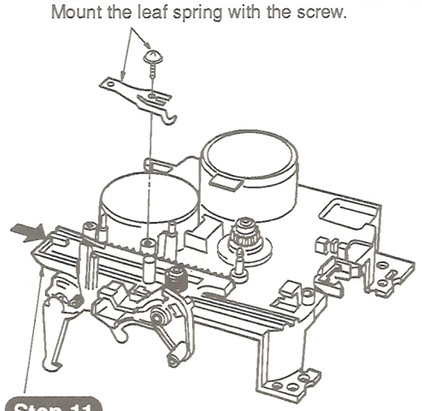

Step 11
Silde the drive rack.

Leaf switch replacement

Step 1 Referring to "Disassembly Instructions" (Ref. No.14), remove the coupling chassis.

Step 2 Remove 3 screws.

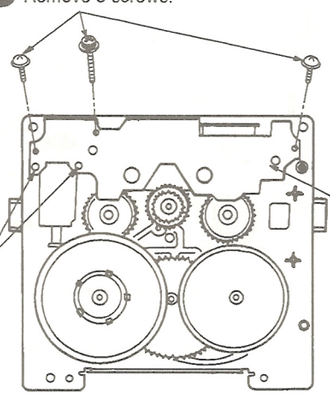

Step 3
Unsolder 2 points.

Step 4
Raise the P.C.B.

Step 5 Unsolder 2 points.

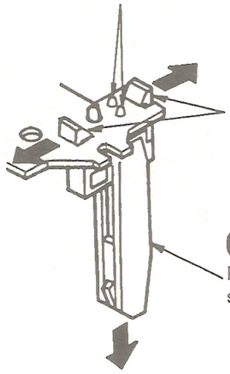

Step 6
Remove 2 claws.

Step 7
Remove the leaf switch downward.

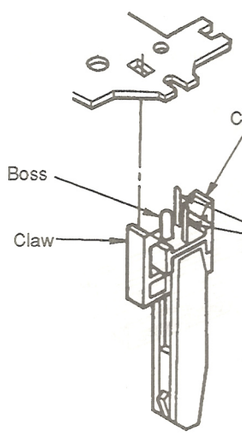

Step 8
Mount 1 boss, 2 claws and 2 switch terminals while adjusting them to the P.C.B..

Step 9
Solder the switch terminals.

Note:
- The illustration shown the method of replacing the leaf switch (S975A). Other leaf switches can also be replaced by the same method.
- When mounting the P.C.B. to the mechanism, be sure to previously fix the end part with screws in order to prevent the P.C.B. from rising and then solder the sections.

Head replacement

Step 1 Referring to "Disassembly Instructions" (Ref. No.15), remove the cassette holder.

Step 2 Remove the claw.

Step 3 Remove the pinch roller.

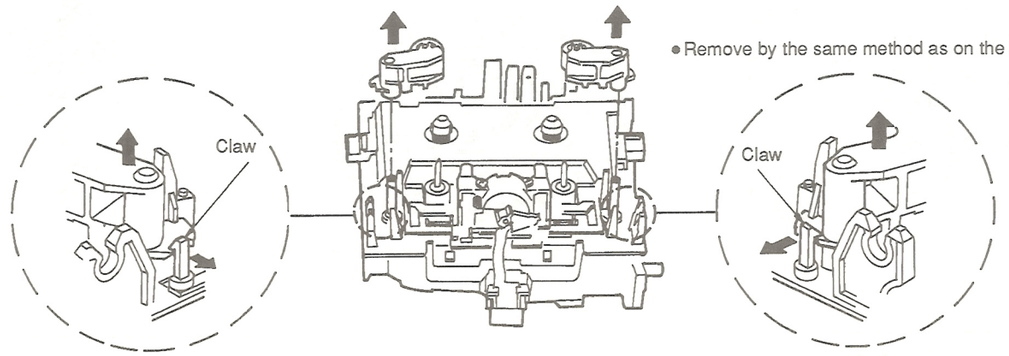

- Remove by the same method as on the REV side.

Step 4
Remove 2 screws.

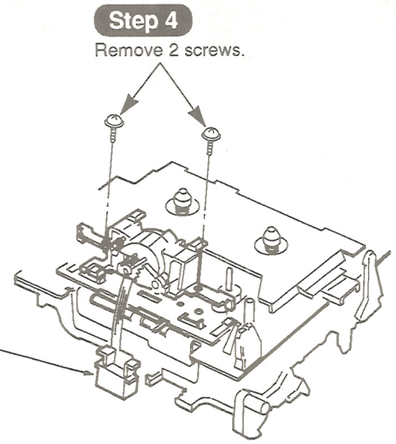

Step 5
Widen 2 inter-claw space and remove the head connector.

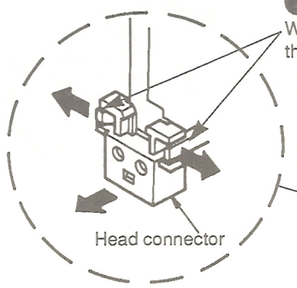

Step 6
Bring into mesh.

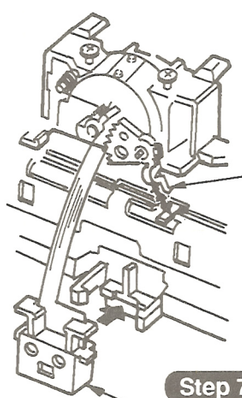

Step 7
Mount the head connector.

Step 8
Mount 2 screws.

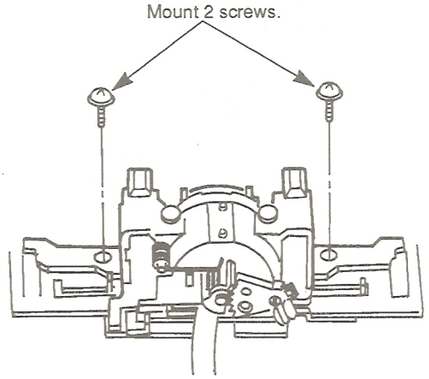

Plunger replacement

Step 1 Referring to "Disassembly Instructions" (Ref. No.14), remove the coupling chassis.

Step 2 Remove 3 screws.

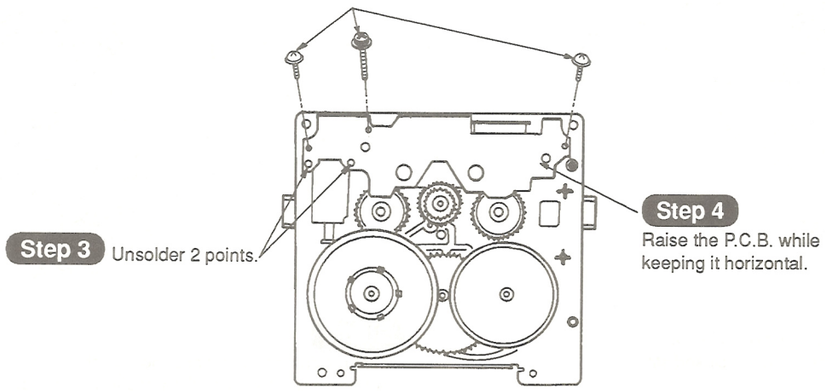

Step 5
Remove 2 claws.

Step 6
Remove 2 claws.

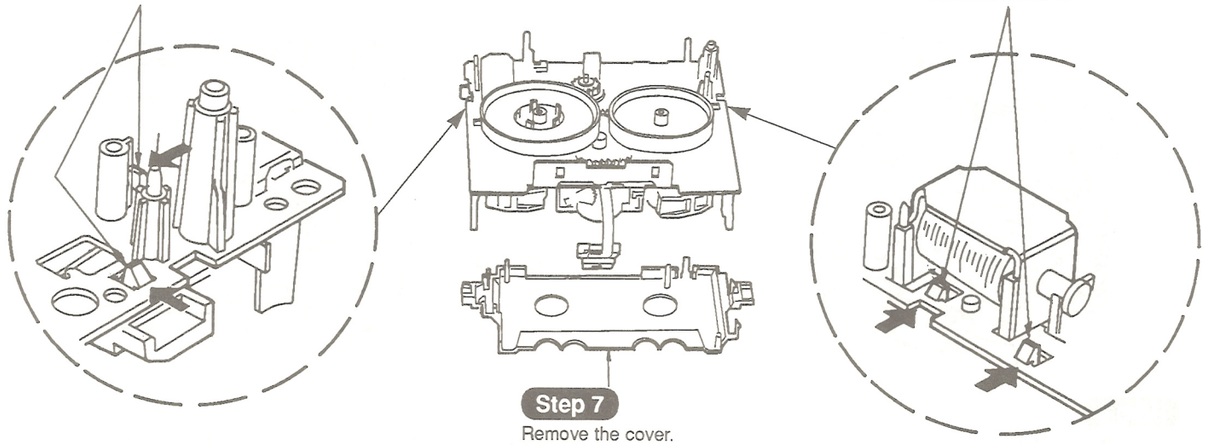

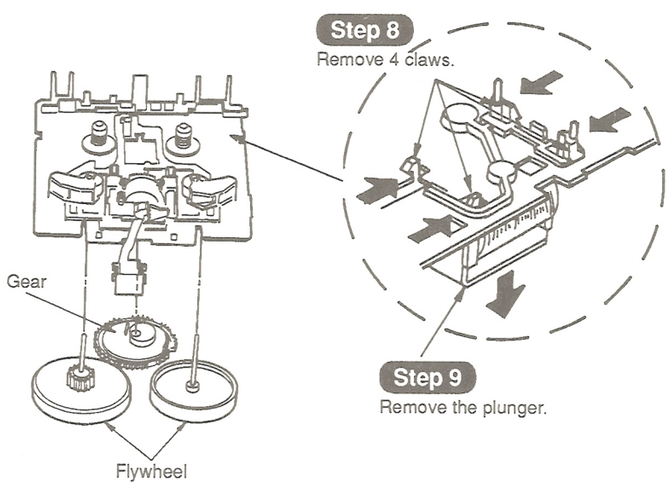

Note: Care should be taken that keeping the mechanism in such position as pictured to the right may displace the flywheels and gear.

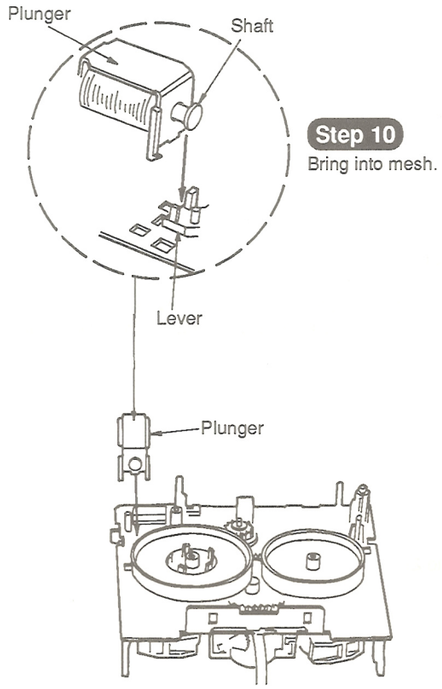

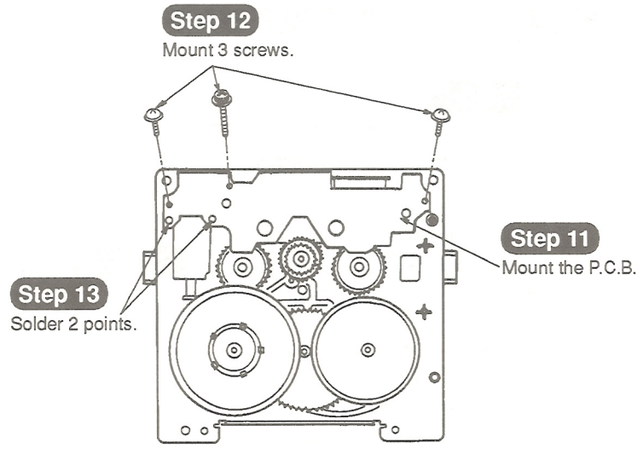

■ Reassembly Instructions

Loading chassis mounting procedure

Step 1
Mount the idler gear. (Should be center)

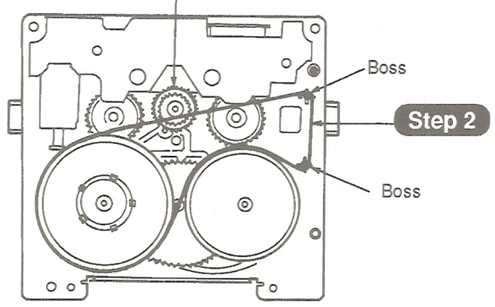

***Terminal Position**
Put the belt on the 2 bosses.
***Note 1:** When handling the belt, use a pair of tweezers or an equivalent tool so that grease or hand sweat may not stick to the belt.

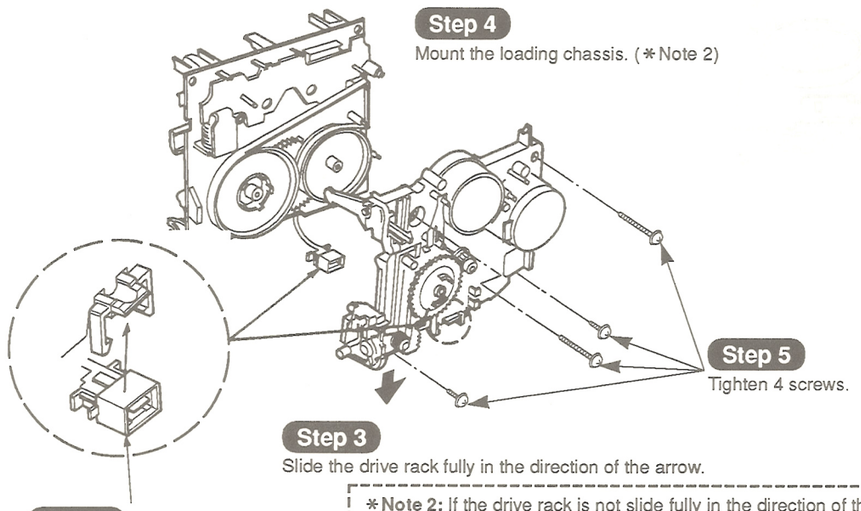

Step 4
Mount the loading chassis. (*Note 2)

Step 5
Tighten 4 screws.

Step 3
Slide the drive rack fully in the direction of the arrow.

***Note 2:** If the drive rack is not slide fully in the direction of the arrow, the eject lever contacts the eject rod and the loading chassis cannot be mounted.

Step 6
Mount the head connector.

Step 7
Put the belt on the pulley.

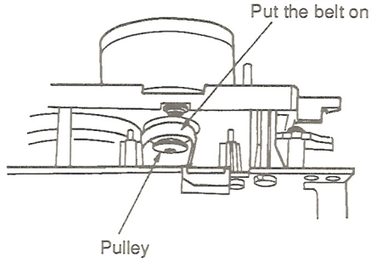

<SIDE VIEW>

Cassette holder mounting procedure

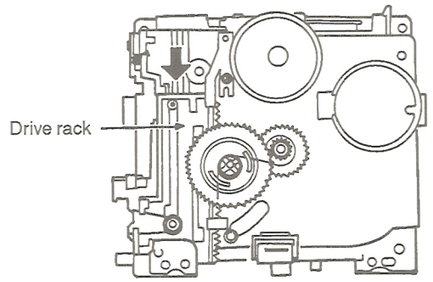

Step 1
Slide the drive rack fully in the direction of the arrow.
(Then the cassette holder is in the closed status.)

Step 3
Make sure that the position of the slider is fully down.

Step 4
Close the cassette holder.

Mount the cassette holder supporting shaft while keeping the flat side vertical.

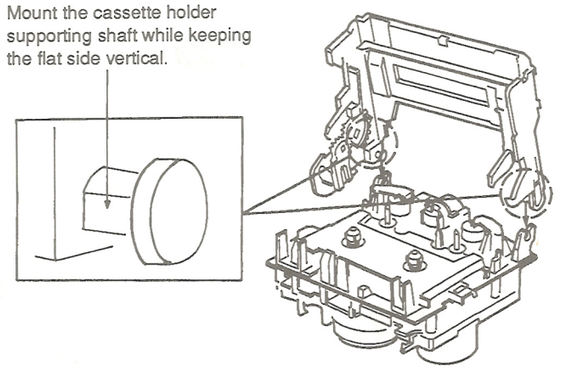

Step 2
Mount the cassette holder supporting shaft to the mechanism while making the angular position of the cassette holder supporting shaft equal to that shown in the figure above.

• Confirmation after mounting the cassette holder

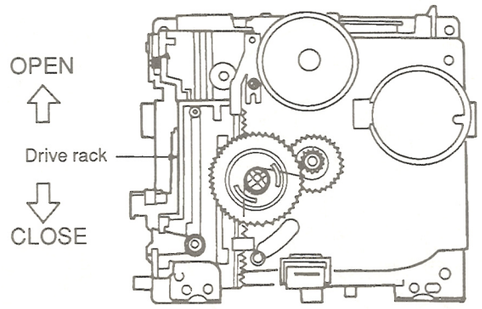

•Sliding the drive rack, make sure that the cassette holder can be opened and closed.

DECK-2 mechanism mounting procedure

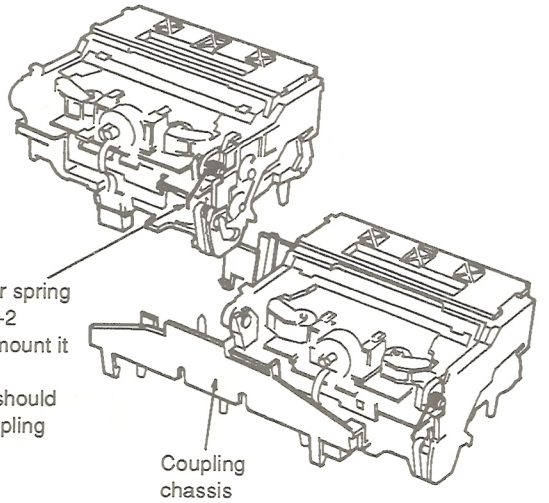

Step 1

Pressing the cassette holder spring by fingering , keep the deck-2 mechanism horizontal and mount it to the coupling chassis.
The cassette holder spring should be positioned inside the coupling chassis.

Step 2

Turn over the mechanism unit.

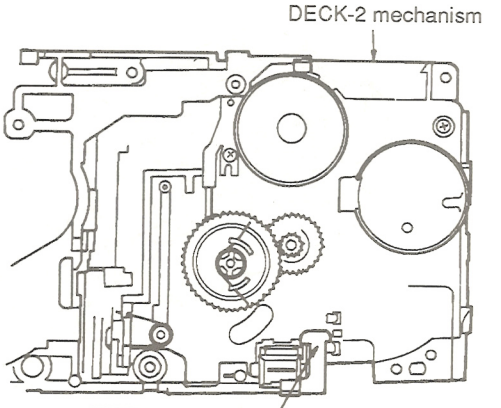

Step 3

Fit in the T-shaped hook.

Step 4

Tight 2 screws.

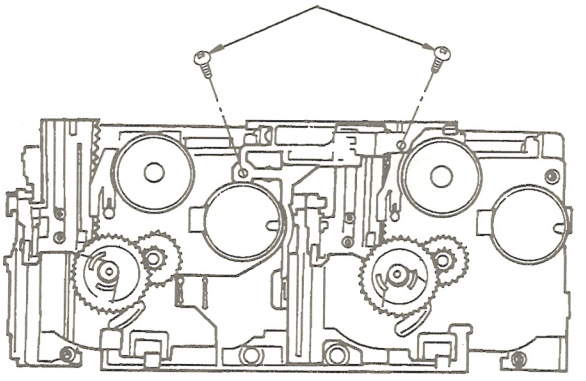

Mechanism control P.C.B. mounting procedure

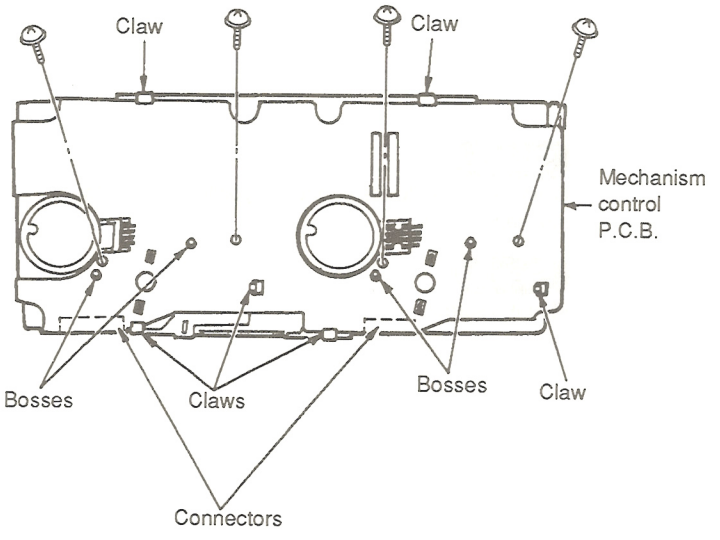

Step 1

Solder the capstan motor and loading motor for both DECK-1 deck-2 mechanisms.

Step 2

Making sure of connector inserting position, mount the mechanism control P.C.B..
(Make the position adjustment for bosses.)

Step 3

Fit in 6 claws.

Step 4

Mount 4 screws.

Mechanism unit mounting procedure

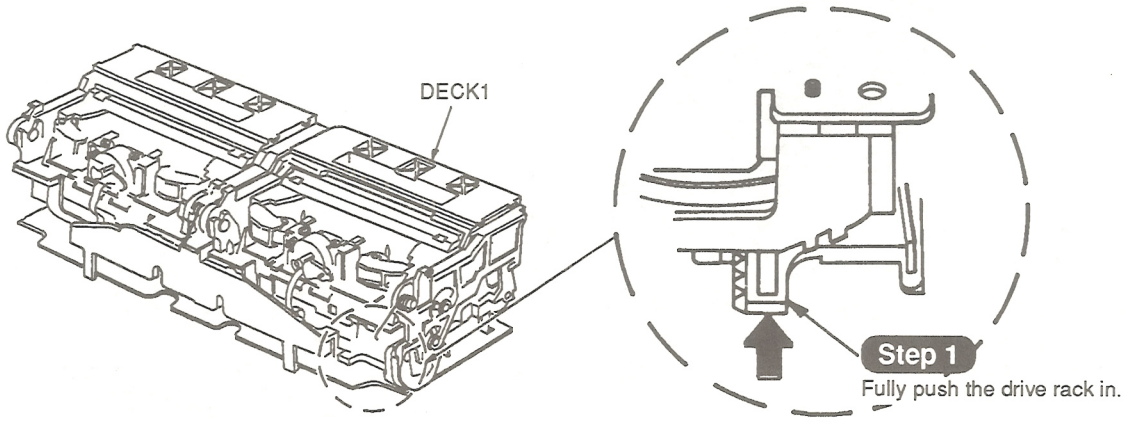

Step 1
Fully push the drive rack in.

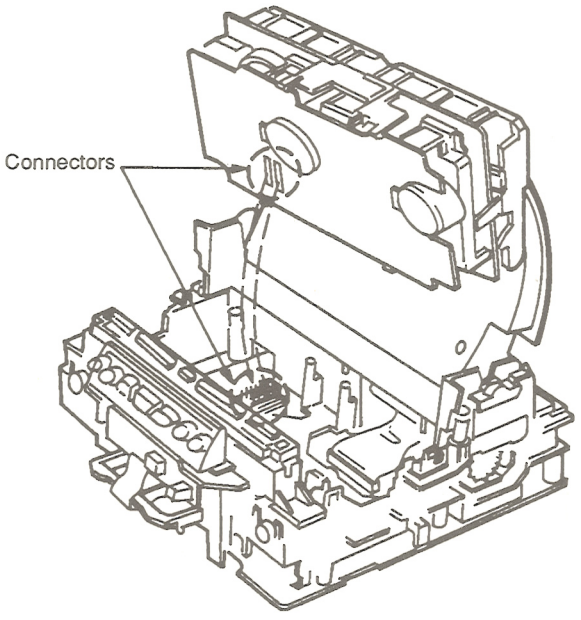

Step 2
Making sure of connector inserting position, mount to the main P.C.B..

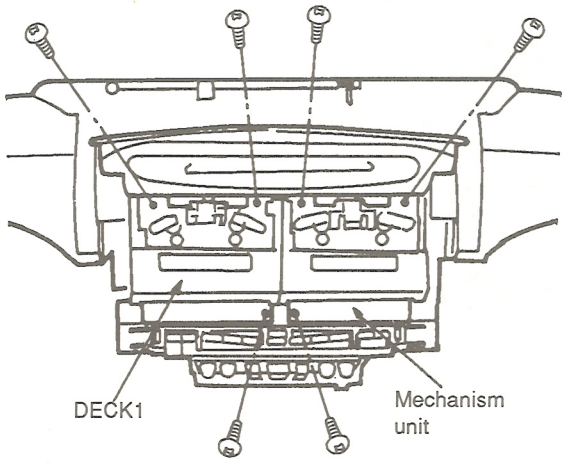

Step 3
Giving attention to the connector position, mount the mechanism unit.

Step 4
Mount 6 screws.

Motor ass'y and shield case mounting procedure

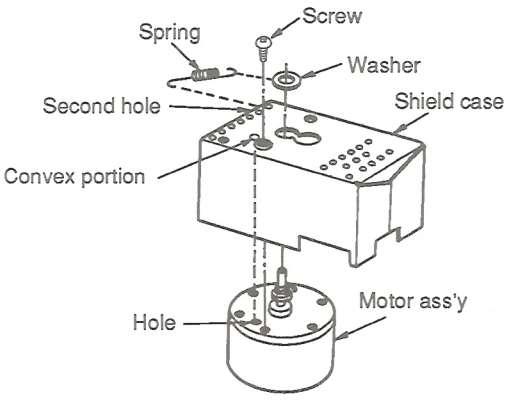

1. Install the shield case over the motor ass'y, fitting the convex portion on the shield case into the hole provided in the motor ass'y and fix with a screw.
2. Install the spring between the second hole on the shield case and the washer.

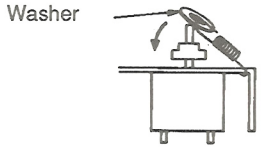

3. Install the washer into the motor ass'y.

CD P.C.B. mounting procedure

1. When installing CD P.C.B., move the optical pickup to the more external side than the mark (▲).
   (When the optical pickup is not moved, the switch (S701) on the CD P.C.B. may be broken.)
2. Connect the flexible cable to the connector (CN701).
3. Install the CD P.C.B. to the traverse unit with 3 screws (❶~❸).
4. Solder 2 traverse motor terminals and 2 spindle motor terminals.

Note: • Insert the flexible cable into the connector and lock securely.
• After installing the motor with screws, solder each motor terminal.

Measure for Tape Trouble

1. Disassembly this unit until the top panel is removed. (Refer to "Disassembly Instructions, Ref. No.6 Removal of the Inner Panel".)
2. Remove the winded tape with turning the pulley and the flywheel in the direction of the arrow.

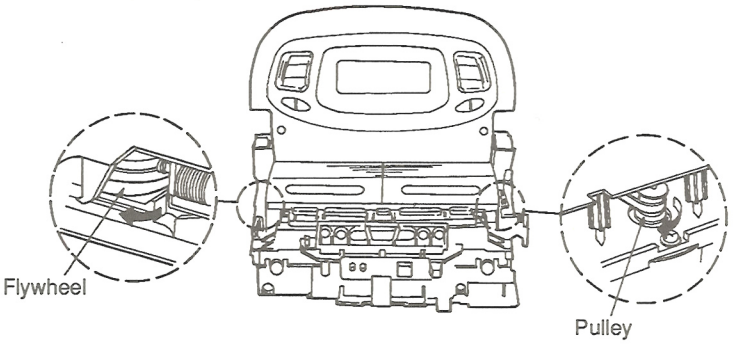

Top panel unit and motor unit mounting procedure

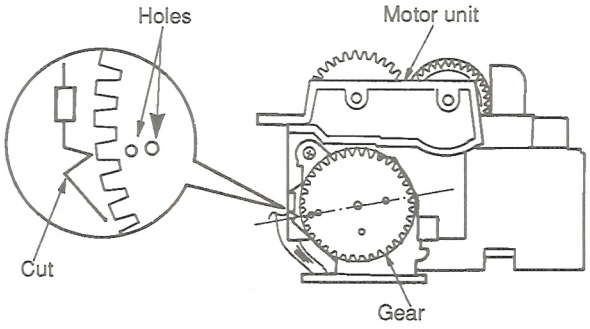

1. Install the gear to the motor unit so that 2 holes of the gear line up with the cut.

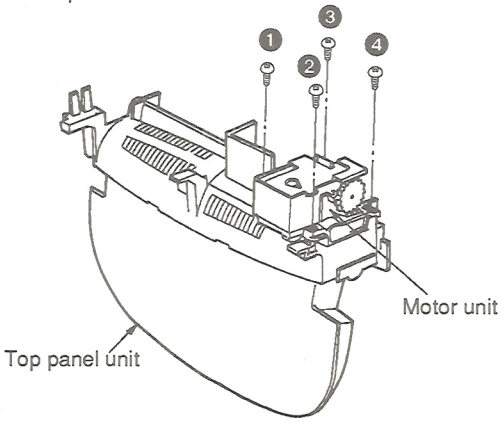

2. Set the top panel unit to be open and install the motor unit with 4 screws (❶~❹).

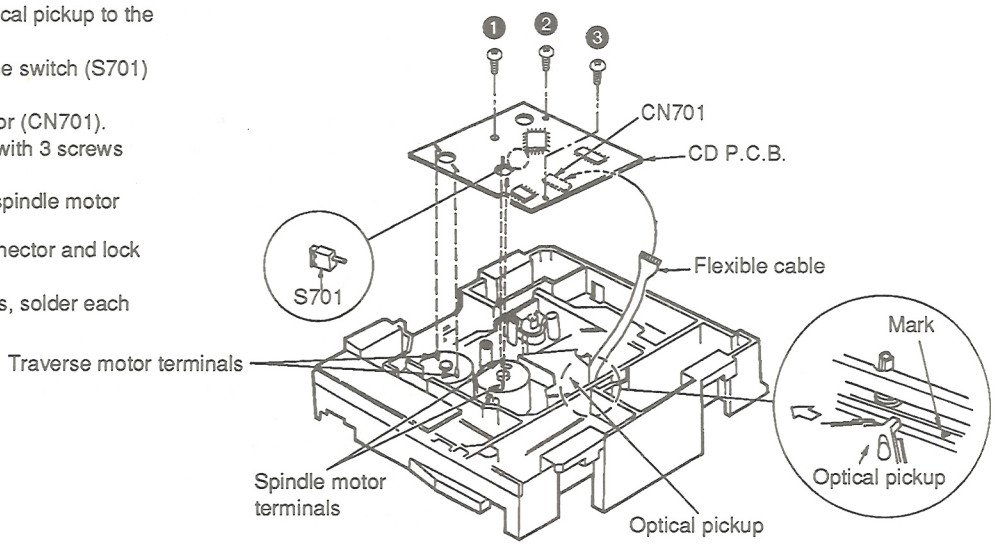

RX-DT75

■ Schematic Diagram ●Tuner circuit (Parts list on pages 107~114)

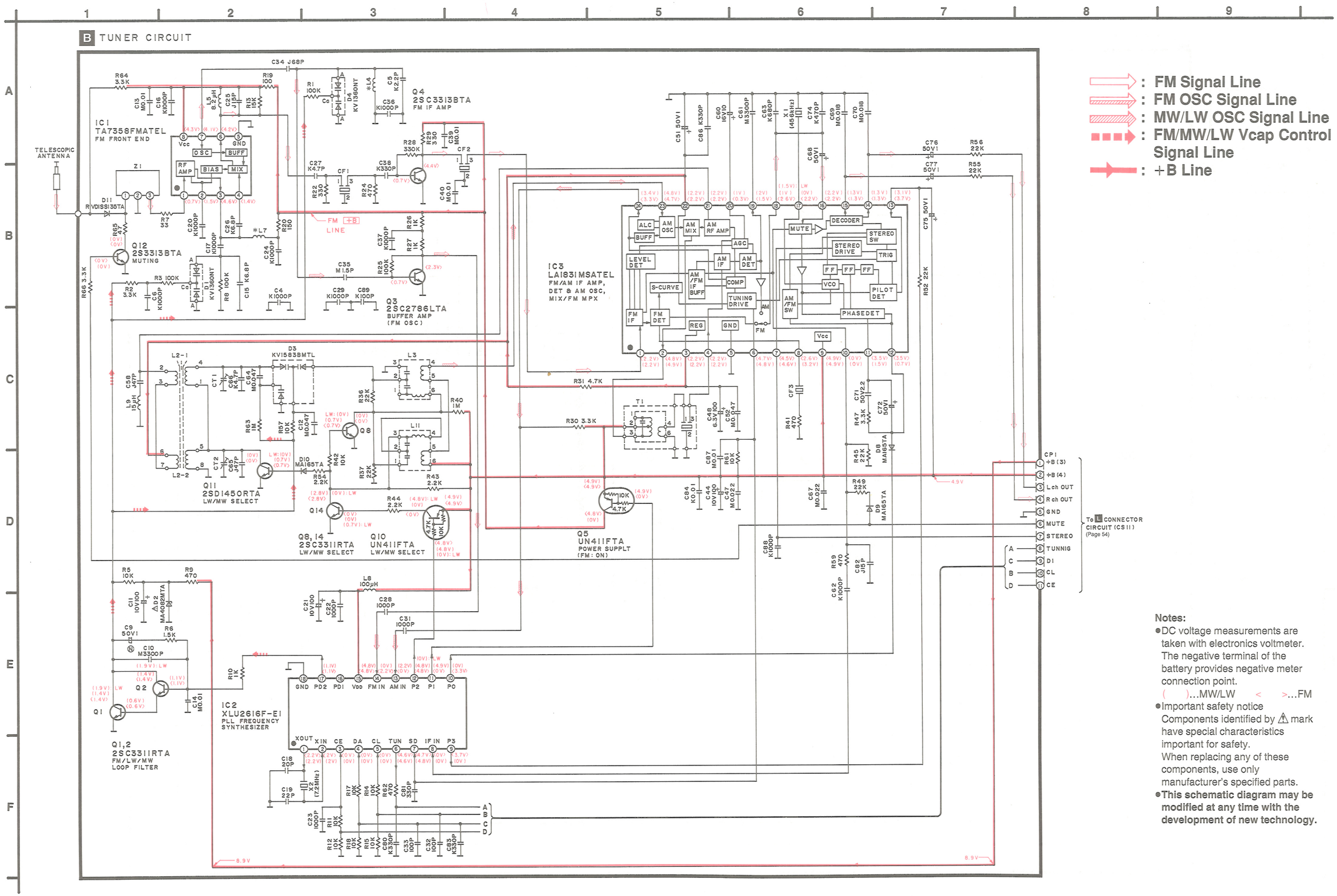

Notes:

- DC voltage measurements are taken with electronics voltmeter. The negative terminal of the battery provides negative meter connection point.
  ( )...MW/LW < >...FM
- Important safety notice
  Components identified by ⚠ mark have special characteristics important for safety.
  When replacing any of these components, use only manufacturer's specified parts.
- **This schematic diagram may be modified at any time with the development of new technology.**

RX-DT75 RX-DT75

■ Schematic Diagram •CD circuit (Parts list on pages 107~114)

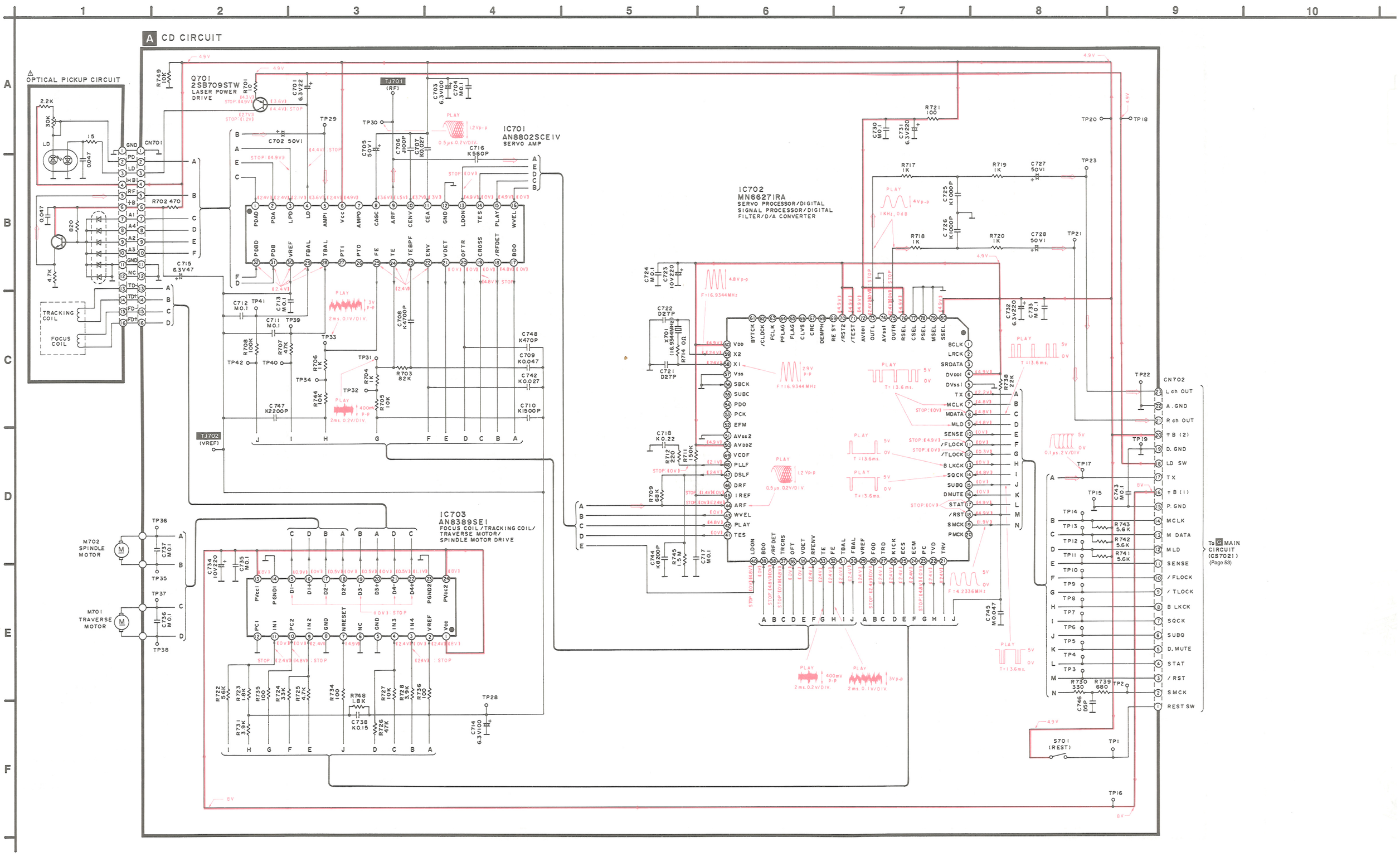

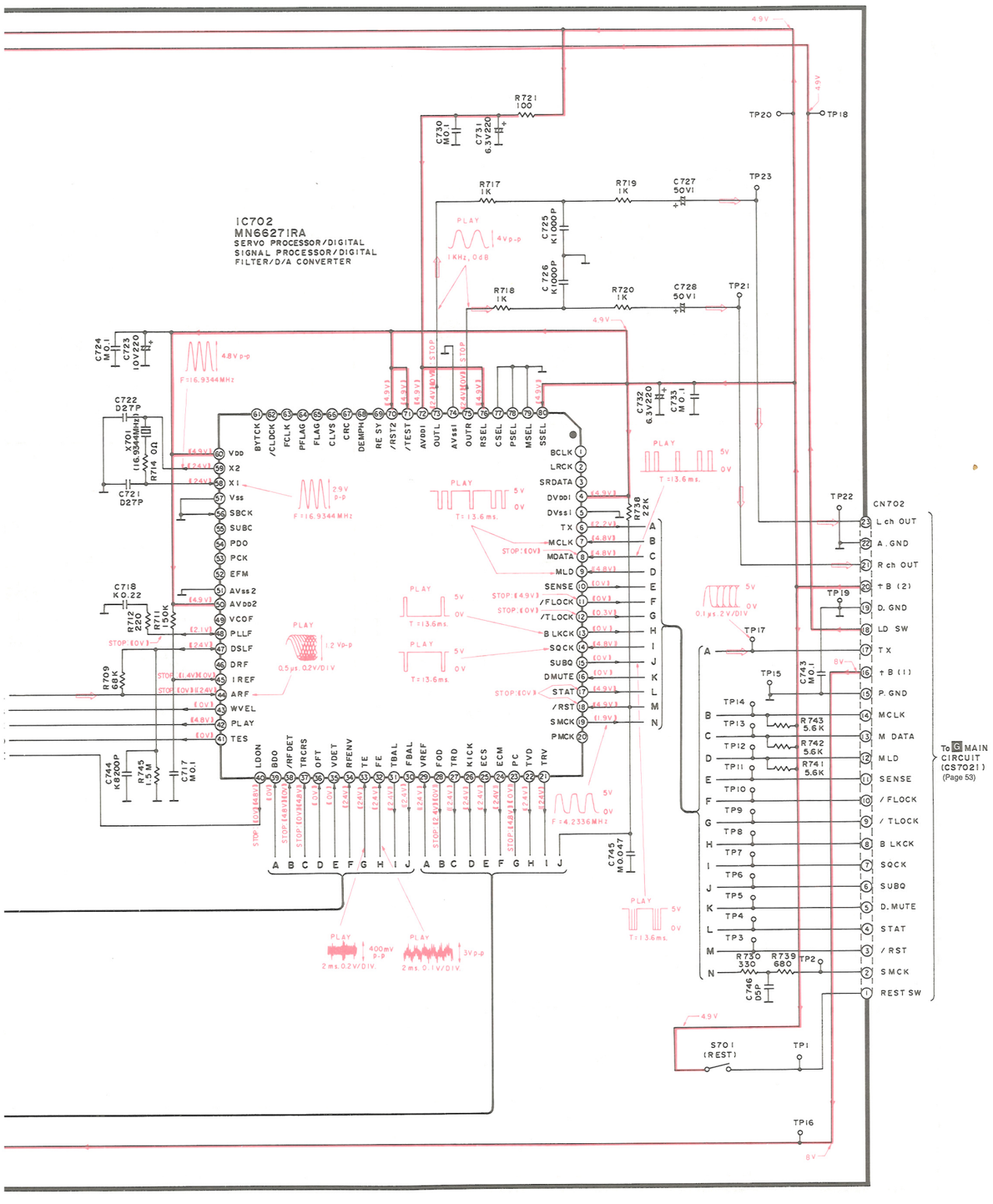

Notes:

<CD circuit>
- ●S701 : Rest switch

<Tape deck/mechanism circuit>
- ●S301 : DECK2 cassette holder close detect switch
- ●S302 : DECK2 cassette holder open detect switch
- ●S303 : DECK1 cassette holder close detect switch
- ●S304 : DECK1 cassette holder open detect switch
- ●S971 : DECK1 mode detect switch
- ●S972 : DECK1 cassette tape insertion detect switch
- ●S973 : DECK1 CrO_2 tape detect switch
- ●S971A : DECK2 mode detect switch
- ●S972A : DECK2 cassette tape insertion detect switch
- ●S973A : DECK2 CrO_2 tape detect switch
- ●S974A : DECK2 record prevention tab detect switch (REV)
- ●S975A : DECK2 record prevention tab detect switch (FWD)
- ●S976A : DECK2 METAL tape detect switch
- ●VR101 : DECK1 Lch playback level (Dolby) adjustment VR
- ●VR102 : DECK2 Lch playback level (Dolby) adjustment VR
- ●VR201 : DECK1 Rch playback level (Dolby) adjustment VR
- ●VR202 : DECK2 Rch playback level (Dolby) adjustment VR
- ●VR301 : DECK2 tape speed adjustment VR (NORMAL)
- ●VR302 : DECK2 tape speed adjustment VR (HIGH)
- ●VR303 : DECK1 tape speed adjustment VR (NORMAL)

<LCD circuit>
- ●S801 : Preset equalizer switch (PRESET EQ)
- ●S802 : Timer switch (TIMER)
- ●S803 : Menu select switch (−/REV)
- ●S804 : Menu select switch (FWD/+)
- ●S805 : Set switch (SET)
- ●S806 : Sub menu select switch (SUB MENU SELECT)
- ●S807 : Main menu select switch (MAIN MENU SELECT)
- ●S808 : Auto CD record switch (AUTO CD RECORD)
- ●S809 : Tape edit switch (TAPE EDIT)
- ●S810 : Record pause switch (REC PAUSE)

<General>
- ●DC voltage measurements are taken with electronics voltmeter.
  The negative terminal of the battery provides negative meter connection point.

No mark...TAPE PLAYBACK (DECK2) ⌈ ⌋...TUNER (( ))...CD
[ ]...RECORD [[ ]]...AUX

- ●Important safety notice
  Components identified by ⚠ mark have special characteristics important for safety.
  When replacing any of these components, use only manufacturer's specified parts.

- **●This schematic diagram may be modified at any time with the development of new technology.**

: CD Signal Line
: Record Signal Line
: Mic Signal Line
: Tape Playback Signal Line
: +B Line

■ Schematic Diagram ●Mechanism circuit, mechanism control circuit and LCD circuit (Parts list on pages 107~114)

C MECHANISM CONTROL CIRCUIT

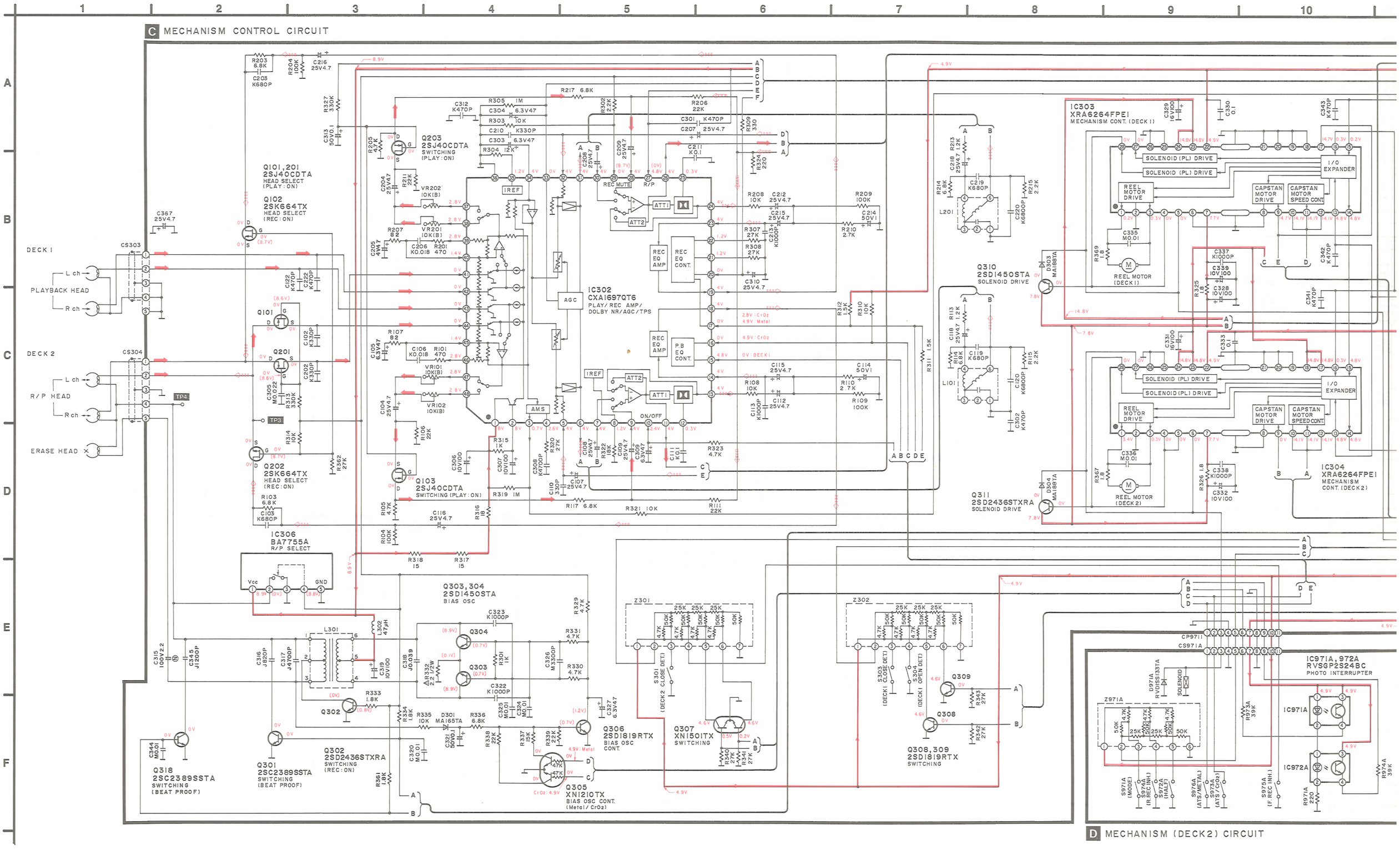

8 9 10 11 12 13 14 15 16 17

IC303
XRA6264FPE1
MECHANISM CONT. (DECK 1)

SOLENOID (PL) DRIVE
SOLENOID (PL) DRIVE
I/O EXPANDER
REEL MOTOR DRIVE
CAPSTAN MOTOR DRIVE
CAPSTAN MOTOR SPEED CONT
REEL MOTOR (DECK 1)

Q310
2SD1450STA
SOLENOID DRIVE

IC304
XRA6264FPE1
MECHANISM CONT. (DECK 2)

Q311
2SD2436STXRA
SOLENOID DRIVE

REEL MOTOR (DECK 2)

Z303
Q315,319,320
2SD1819RTX
TPS DRIVE
Q320
Q315
Q319
S302 (DECK 2 OPEN DET.)
Q316
UN5114TX
REC MUTE

IC305
BU2042FE1
SYSTEM CONTROL
REC L
DOLBY
AGC
BP-B
BP-A
LATCH
CLK
DATA
GND
DMT
TAPE H
2H
HI-SP
HS DOLBY
Vcc

TP5
TP7
TP6
C217 25V4.7
C117 25V4.7
R212 68K
R112 68K
R306
D302 RVD1SR139TA
CS301
MIC IN
Rch OUT
Lch OUT
GND
Rch IN
Lch IN
+B(7)
GND
+B(8)
GND
+B(9)
To C MAIN CIRCUIT (CP3011) (Page 51)

CS302
MKCLK
MKDATA
MKLATCH
VREF+
VREF-
ADIN4
ADIN5
ADIN6
ADIN7
+B(6)
To C MAIN CIRCUIT (CP3021) (Page 54)

Q312,313
2SB1218RTX
MOTOR SPEED CONTROL
Q312
Q313
VR301 20K(B)
VR303 5K(B)
VR302 10K(B)
CP305
CP306
CAPSTAN MOTOR (DECK 2)
CAPSTAN MOTOR (DECK 1)

D MECHANISM (DECK2) CIRCUIT

IC971A, 972A
RVSGP2S24BC
PHOTO INTERRUPTER
Z971A
D971A RVDISS1337A
SOLENOID
S971A (MODE)
S976A (ATS/METAL)
S972A (HALF)
S975A (F.REC INH.)
S976 (R.REC INH.)
S973 (ATS/CrO2)

E MECHANISM (DECK1) CIRCUIT

IC971, 972
RVSGP2S24BC
PHOTO INTERRUPTER
D971 RVDISS1337A
SOLENOID
S972 (HALF)
S973 (CrO2)
S971 (MODE)

F LCD CIRCUIT

IC802
S-806H-T
RESET
Q802,80
2SC3311
SWITCHIN
(MBP)
D802 MA4051MTA
Z802 (BUZZER)
S801 (PRESET EQ)
S802 (TIMER)
S803 (-/REV)
S804 (FWD/+)
S805 (SET)
S806 (SUB MENU SELECT)
S807 (MAIN MENU SELECT)
S808 (AUTO CD RECORD)
S809 (TAPE EDIT)
S810 (REC PAUSE)

2 13 14 15 16 17 18 19 20 21 22

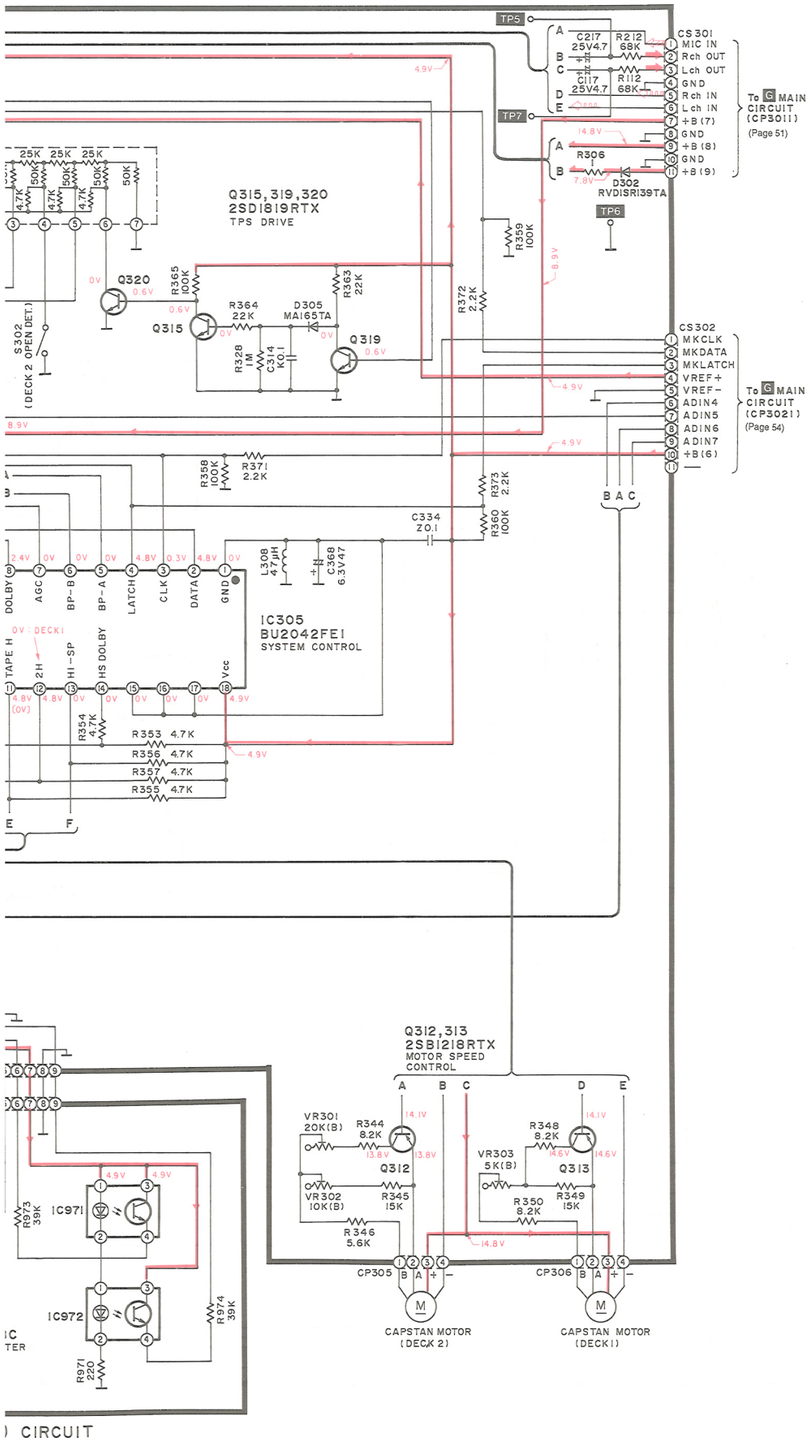

) CIRCUIT

F LCD CIRCUIT

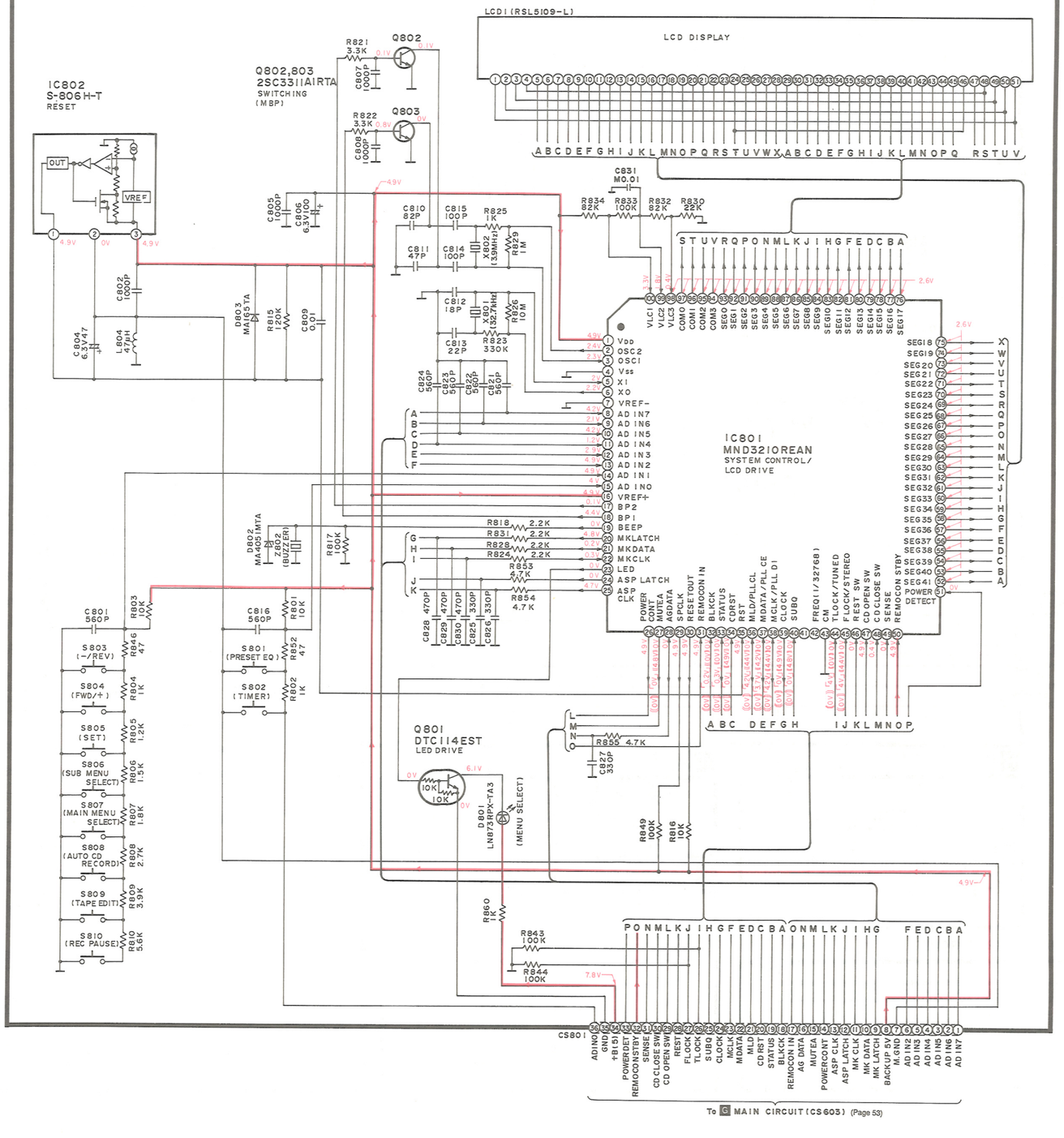

RX-DT75 RX-DT75

■ Schematic Diagram •Main circuit, power supply circuit (Parts list on pages 107~114)

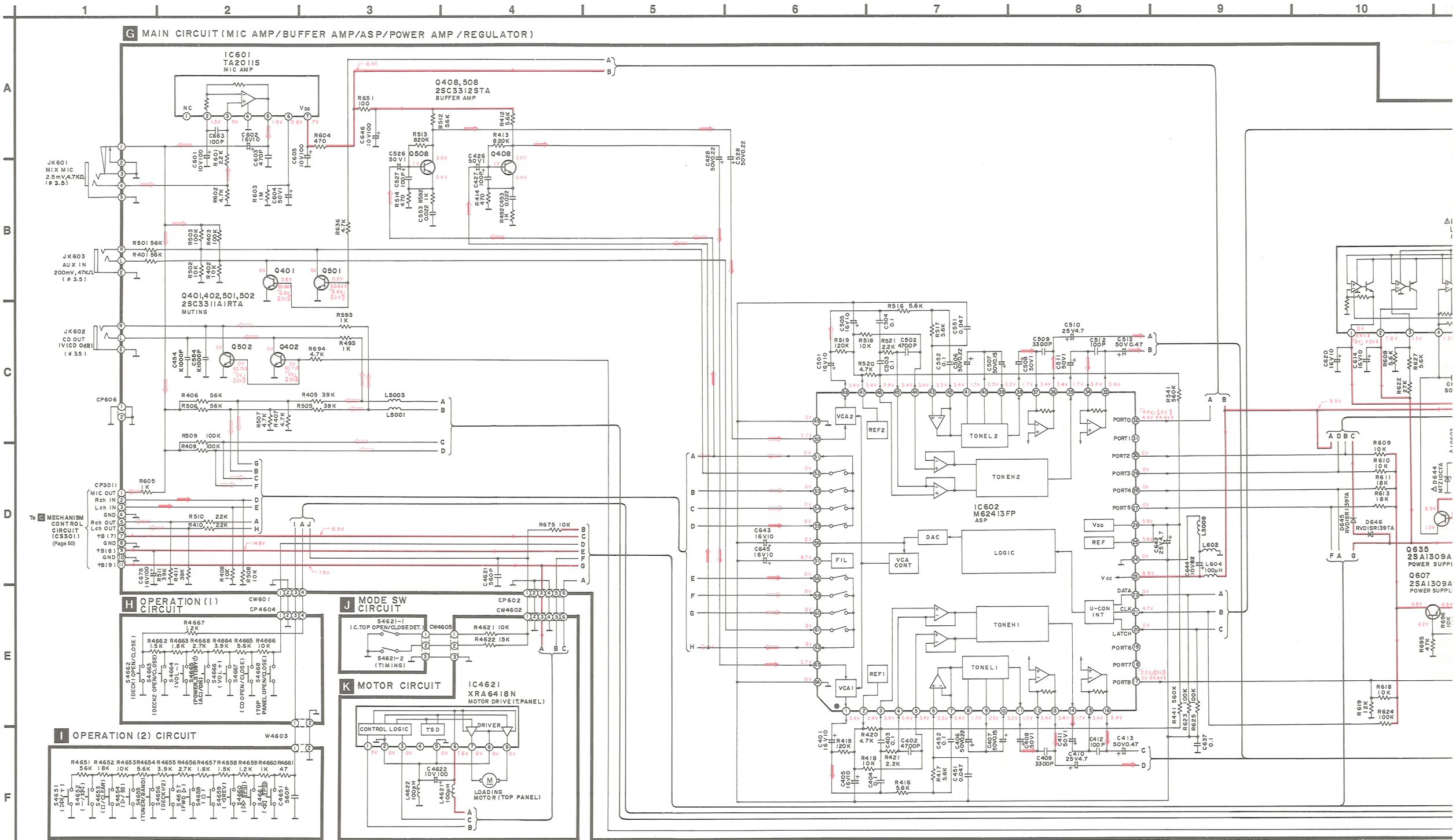

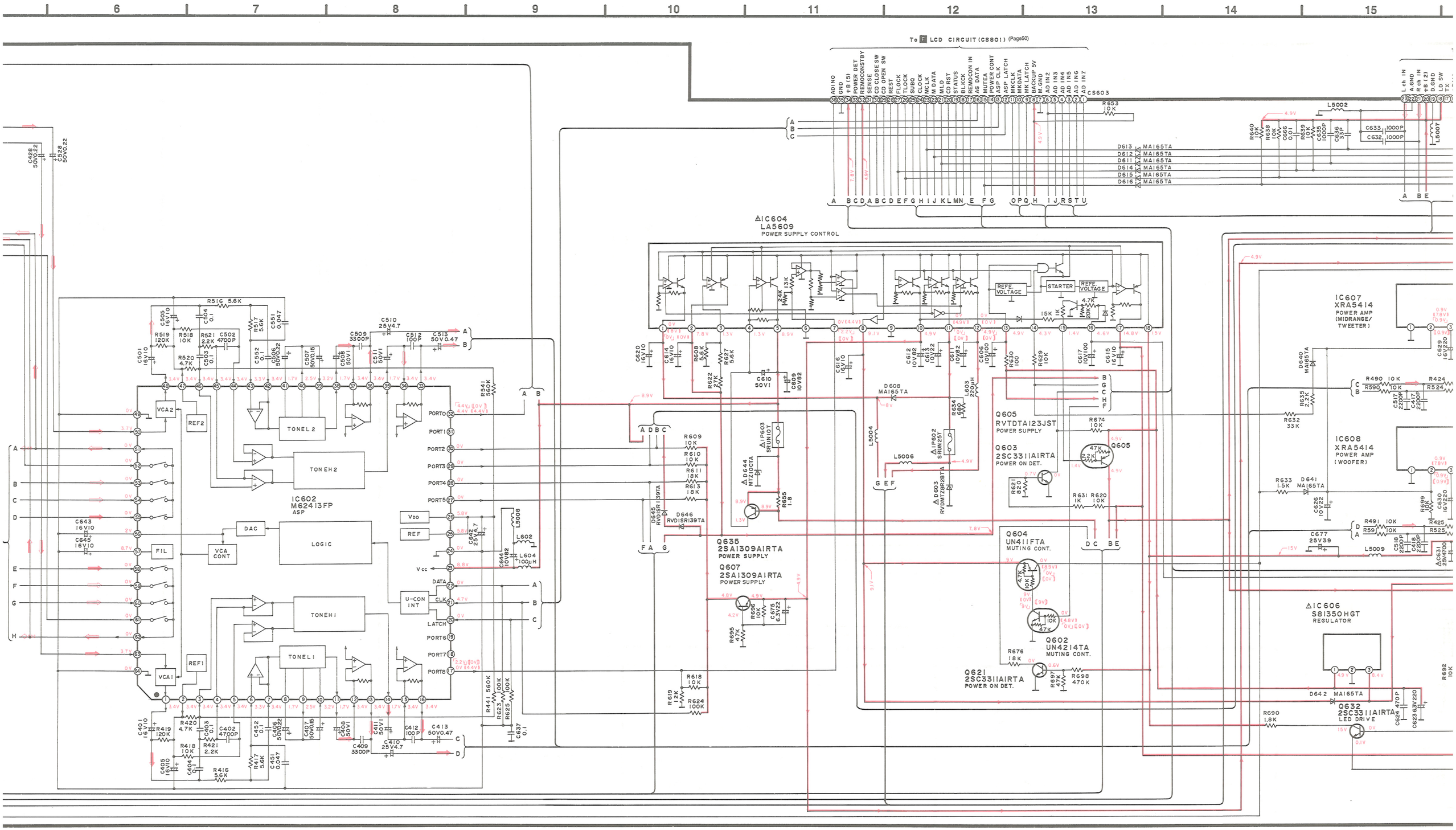
6
7
8
9
10
11
12
13
14
15
To F LCD CIRCUIT (CSB01) (Page50)
CS603
R653 10K
L5002
IC604
LA5609
POWER SUPPLY CONTROL
REFE. VOLTAGE
STARTER
REFE. VOLTAGE
D608 MA165TA
L603 220μH
L5004
L5006
Q605
RVTDTA123JST
POWER SUPPLY
Q603
2SC3311AIRTA
POWER ON DET.
Q604
UN411FTA
MUTING CONT.
Q602
UN4214TA
MUTING CONT.
Q621
2SC3311AIRTA
POWER ON DET.
Q635
2SA1309AIRTA
POWER SUPPLY
Q607
2SA1309AIRTA
POWER SUPPLY
IC607
XRA5414
POWER AMP
(MIDRANGE/
TWEETER)
IC608
XRA5414
POWER AMP
(WOOFER)
IC606
S81350HGT
REGULATOR
Q632
2SC3311AIRTA
LED DRIVE
D642 MA165TA
IC602
M62413FP
ASP
VCA2
REF2
TONEL2
TONEH2
VCA1
REF1
TONEH1
TONEL1
DAC
LOGIC
VCA CONT
FIL
U-CON INT
Vdd
REF
Vcc
DATA
CLK
LATCH
PORT0
PORT1
PORT2
PORT3
PORT4
PORT5
PORT6
PORT7
PORT8
L602
L604 100μH
L5008
L5009

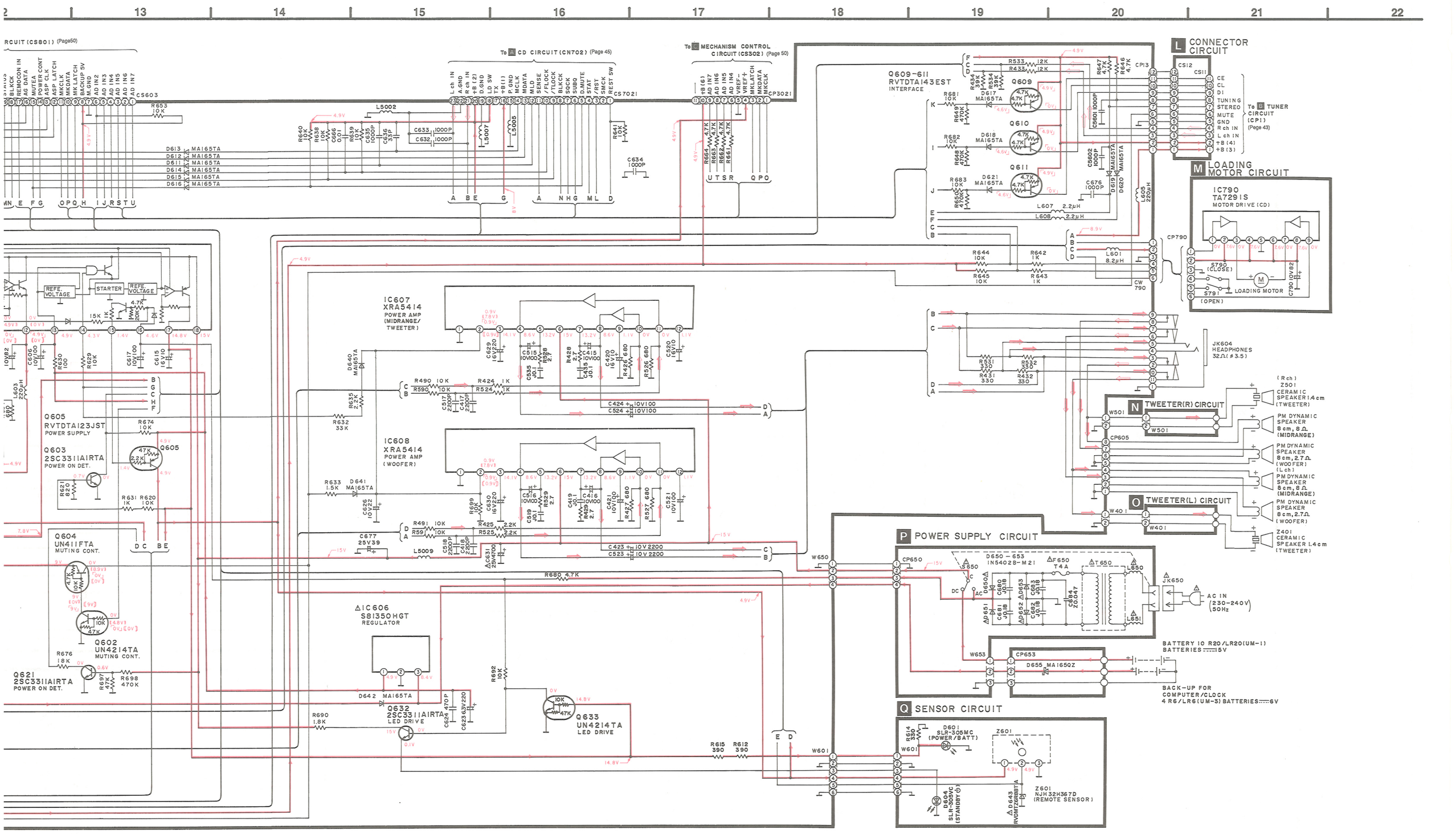

13
14
15
16
17
18
19
20
21
22
To A CD CIRCUIT (CN702) (Page 45)
To C MECHANISM CONTROL CIRCUIT (CS302) (Page 50)
L CONNECTOR CIRCUIT
To B TUNER CIRCUIT (CP1) (Page 43)
M LOADING MOTOR CIRCUIT
IC790 TA7291S MOTOR DRIVE (CD)
LOADING MOTOR
Q609-611 RVTDTA143EST INTERFACE
IC607 XRA5414 POWER AMP (MIDRANGE/TWEETER)
IC608 XRA5414 POWER AMP (WOOFER)
Q605 RVTDTA123JST POWER SUPPLY
Q603 2SC3311AIRTA POWER ON DET.
Q604 UN411FTA MUTING CONT.
Q602 UN4214TA MUTING CONT.
Q621 2SC3311AIRTA POWER ON DET.
IC606 S81350HGT REGULATOR
Q632 2SC3311AIRTA LED DRIVE
Q633 UN4214TA LED DRIVE
JK604 HEADPHONES 32Ω (ø3.5)
N TWEETER(R) CIRCUIT
O TWEETER(L) CIRCUIT
Z501 CERAMIC SPEAKER 1.4cm (TWEETER)
PM DYNAMIC SPEAKER 8cm, 8Ω (MIDRANGE)
PM DYNAMIC SPEAKER 8cm, 2.7Ω (WOOFER)
Z401 CERAMIC SPEAKER 1.4cm (TWEETER)
P POWER SUPPLY CIRCUIT
D650-653 IN5402B-M21
AC IN (230-240V) 50Hz
BATTERY 10 R20/LR20(UM-1) BATTERIES 15V
BACK-UP FOR COMPUTER/CLOCK 4 R6/LR6(UM-3) BATTERIES 6V
Q SENSOR CIRCUIT
D601 SLR-305MC (POWER/BATT)
Z601 NJH32H367D (REMOTE SENSOR)

Notes:

<Main circuit>

- ●S650 : AC/DC select switch
- ●S790 : Disc tray close detect switch
- ●S791 : Disc tray open detect switch
- ●S4621 : S4621-1; Top panel open/close detect switch
  S4621-2; Top panel timing switch
- ●S4651 : Tuning/CD skip switch (TUNING/CD ▷▷I /+)
- ●S4652 : Tuning/CD skip switch (TUNING/CD −/ I◁◁)
- ●S4653 : CD stop/clear switch (□/CLEAR)
- ●S4654 : CD play/pause switch (▷ / ▯▯)
- ●S4655 : Tuner/band select switch (TUNER/BAND)
- ●S4656 : Deck1/2 select switch (DECK1/2)
- ●S4657 : Tape forward-side playback switch (FWD ▷)
- ●S4658 : Tape stop switch (□)
- ●S4659 : Tape reverse-side playback switch (◁ REV)
- ●S4660 : Tape FF/TPS switch (TPS ▷▷)
- ●S4661 : Tape REW/TPS switch (◁◁ TPS)
- ●S4662 : DECK1 cassette cover open/close switch (DECK1 OPEN/CLOSE)
- ●S4663 : DECK2 cassette cover open/close switch (DECK2 OPEN/CLOSE)
- ●S4664 : Volume down switch (VOL −)
- ●S4665 : Power switch (POWER, STDBY/ON)
- ●S4666 : Volume up switch (VOL +)
- ●S4667 : CD tray open/close switch (CD OPEN/CLOSE)
- ●S4668 : Top panel open/close switch (TOP PANEL OPEN/CLOSE)
- ●VR601 : Top panel open sensitivity adjustment VR

<General>

- ●DC voltage measurements are taken with electronics voltmeter.
  The negative terminal of the battery provides negative meter connection point.

No mark...TAPE PLAYBACK (DECK2) 「 」...TUNER (( ))...CD
[[ ]]...AUX

- ●Battery current:

Vol. min...305 mA (FM)	Vol. min...1600 mA (FM)
290 mA (MW/LW)	1380 mA (MW/LW)
475 mA (TAPE)	1790 mA (TAPE)
510 mA (CD)	1840 mA (CD)

Measurement instruction

MW/LW:	74 dB/m, 30% Mod.
FM:	60 dB, 30% Mod.
TAPE:	315 Hz, 0 dB
CD:	1 kHz, 0 dB

- ●Important safety notice
  Components identified by ⚠ mark have special characteristics important for safety.
  When replacing any of these components, use only manufacturer's specified parts.

- ●**This schematic diagram may be modified at any time with the development of new technology.**

: FM Signal Line
: Record Signal Line
: Tape Playback Signal Line
: CD Signal Line
: Mic Signal Line
: Main Signal Line
: +B Line

■ Printed Circuit Board Diagram

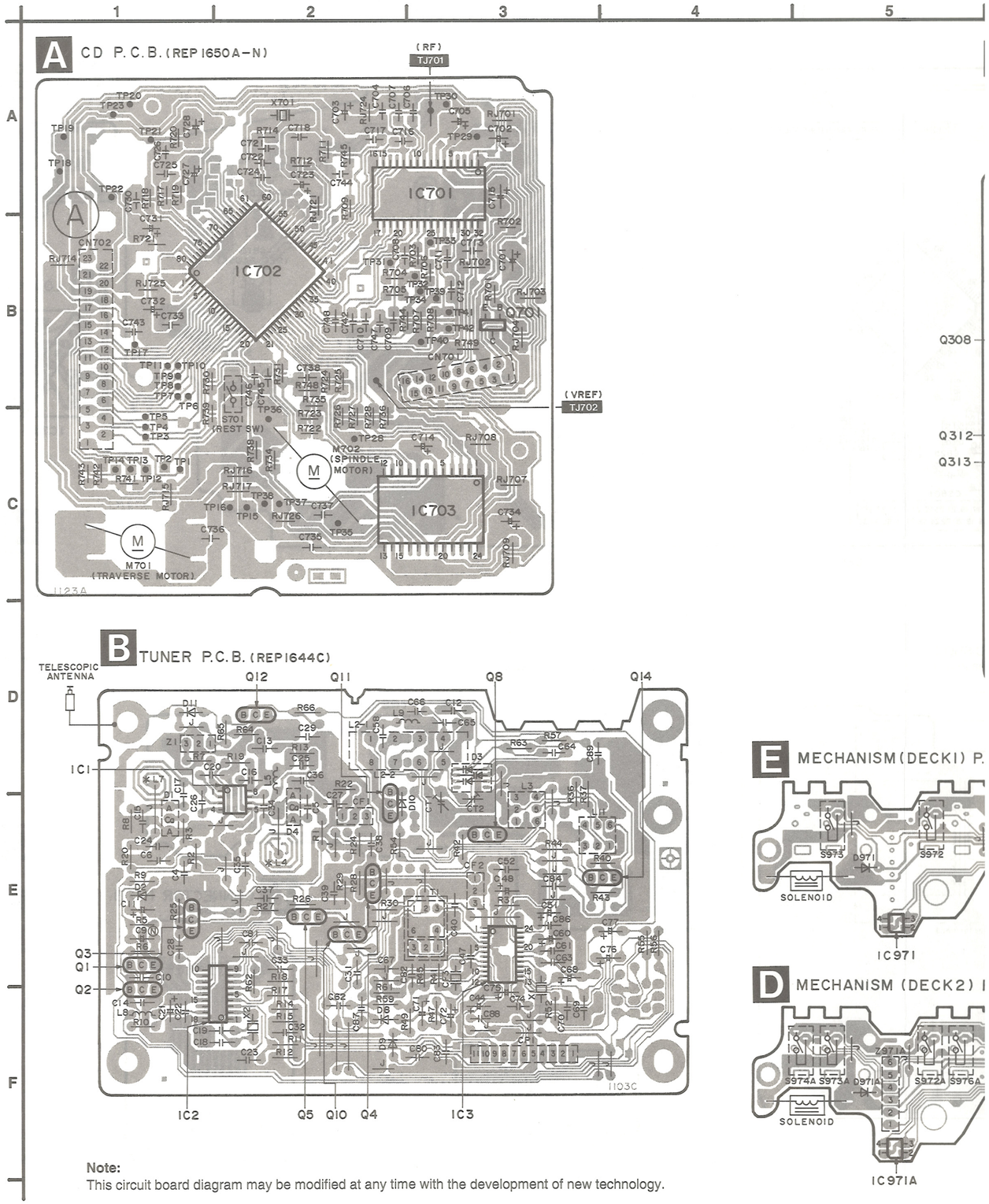

Note:
This circuit board diagram may be modified at any time with the development of new technology.

5 6 7 8 9 10 11 12 13 14

C MECHANISM CONTROL P.C.B. (REP1687B)

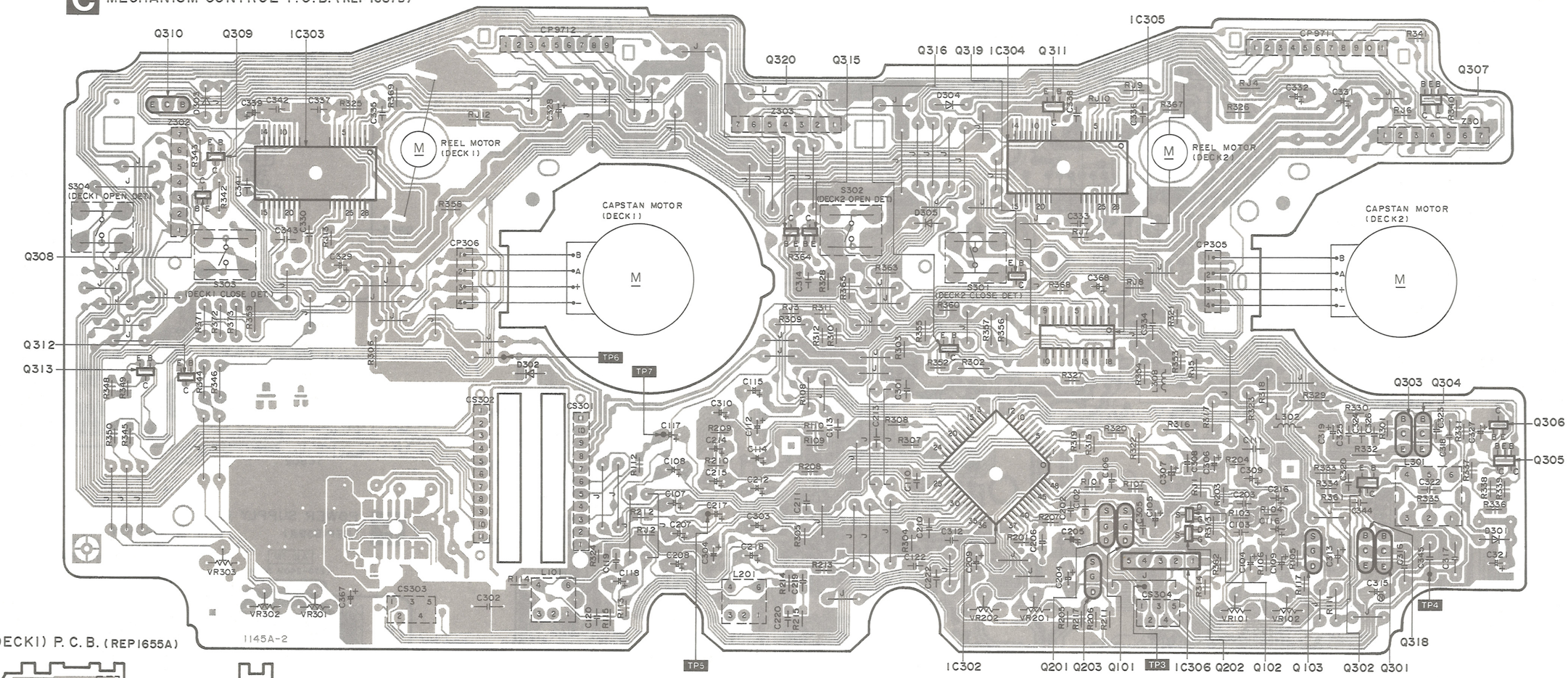

MECHANISM (DECK1) P.C.B. (REP1655A)

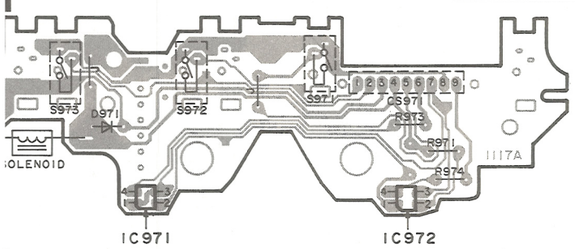

MECHANISM (DECK2) P.C.B. (REP1656A)

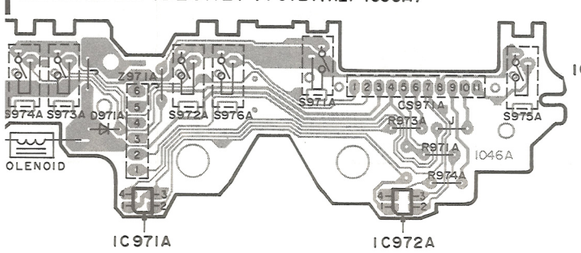

K MOTOR P.C.B. (REP1692A)

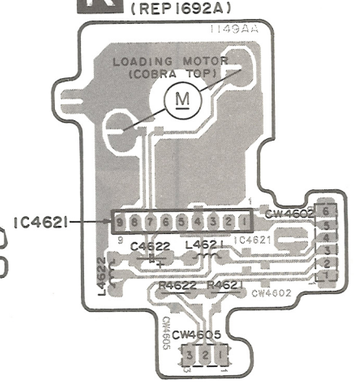

H OPERATION (1) P.C.B. (REP1689C)

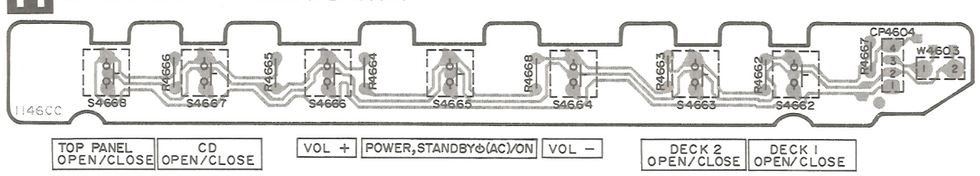

I OPERATION (2) P.C.B. (REP1689C)

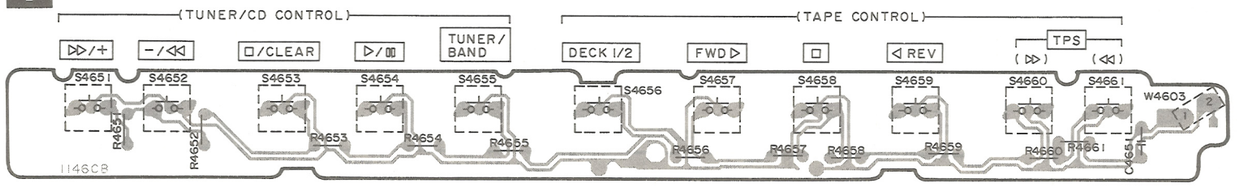

J MODE SW P.C.B. (REP1692A)

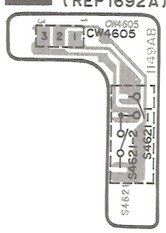

■ Printed Circuit Board Diagram

G MAIN P.C.B. (REP1689C)

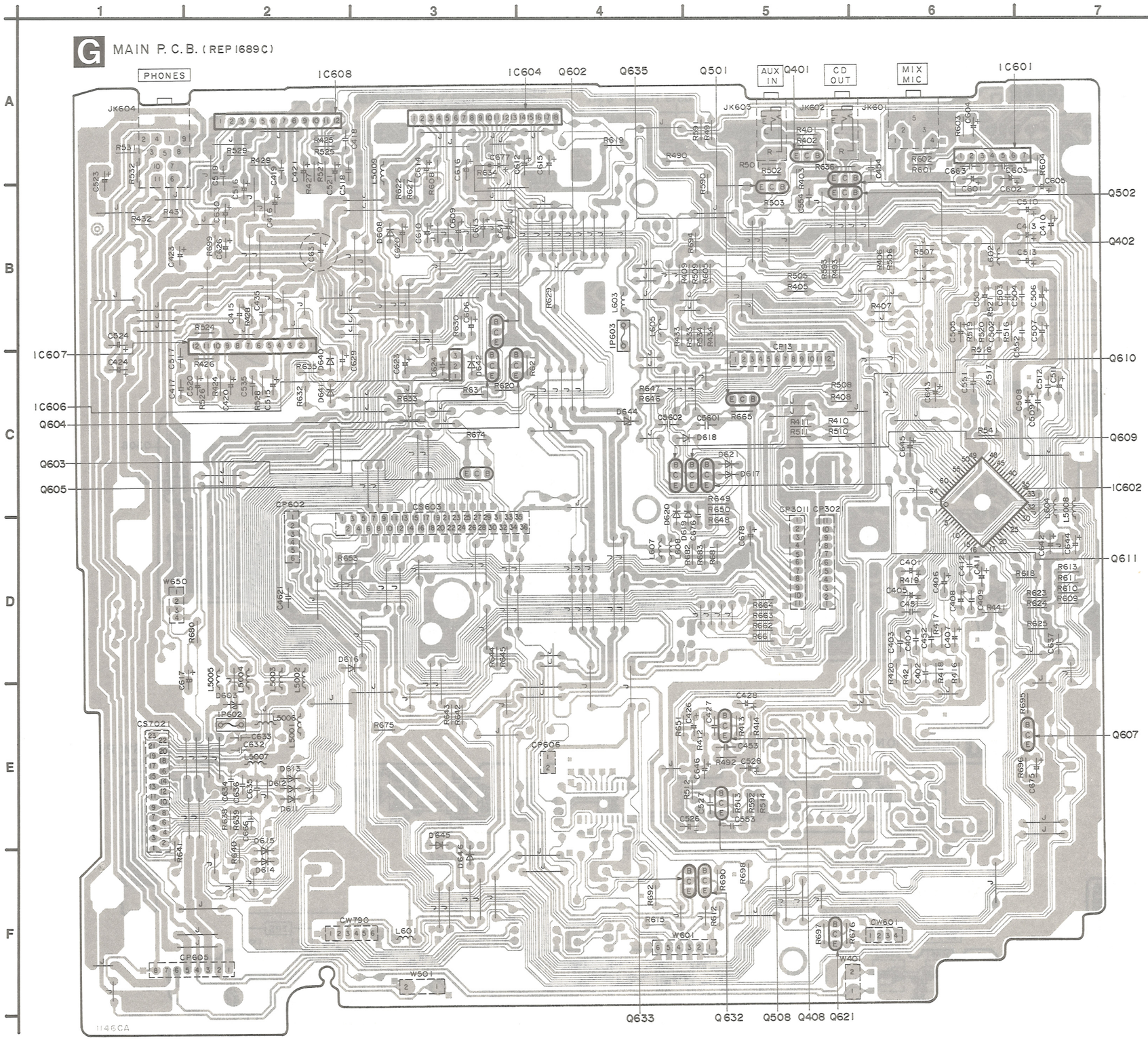

F LCD P.C.B. (REP1691C)

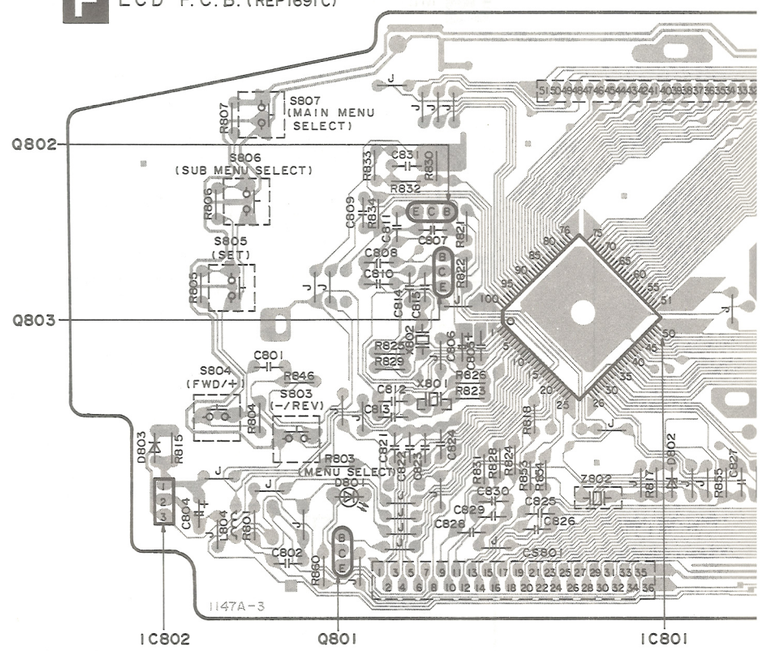

P POWER SUPPLY P.C.B. (REP1859A)

CAUTION
RISK OF ELECTRIC SHOCK
AC voltage line. Please do not touch this portion.

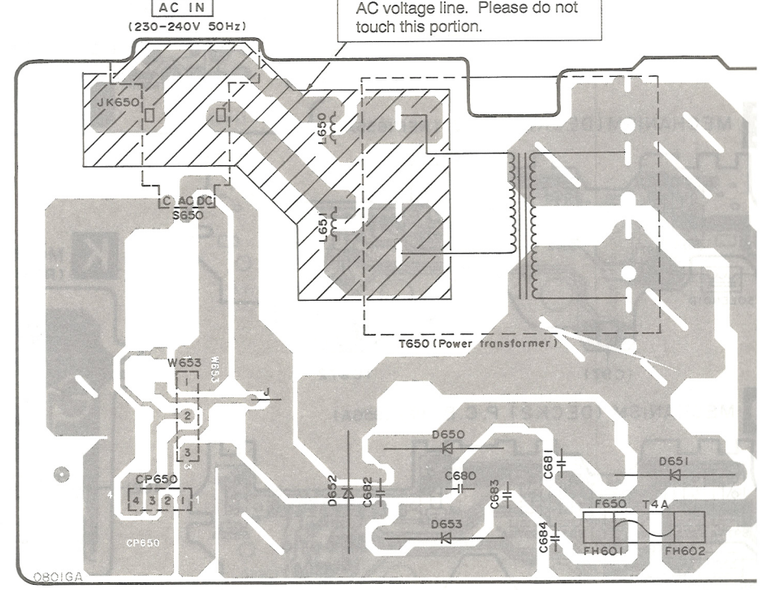

10 11 12 13 14 15 16 17 18 19

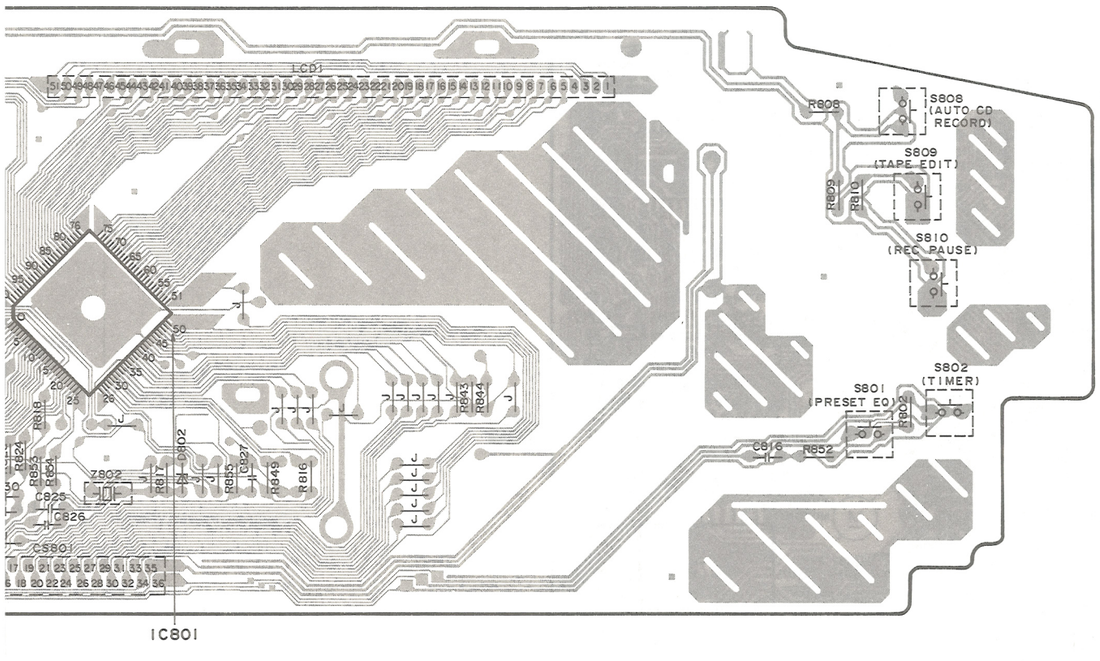

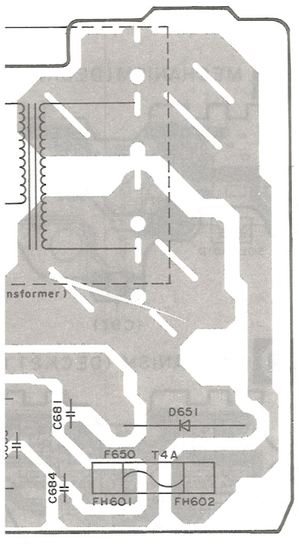

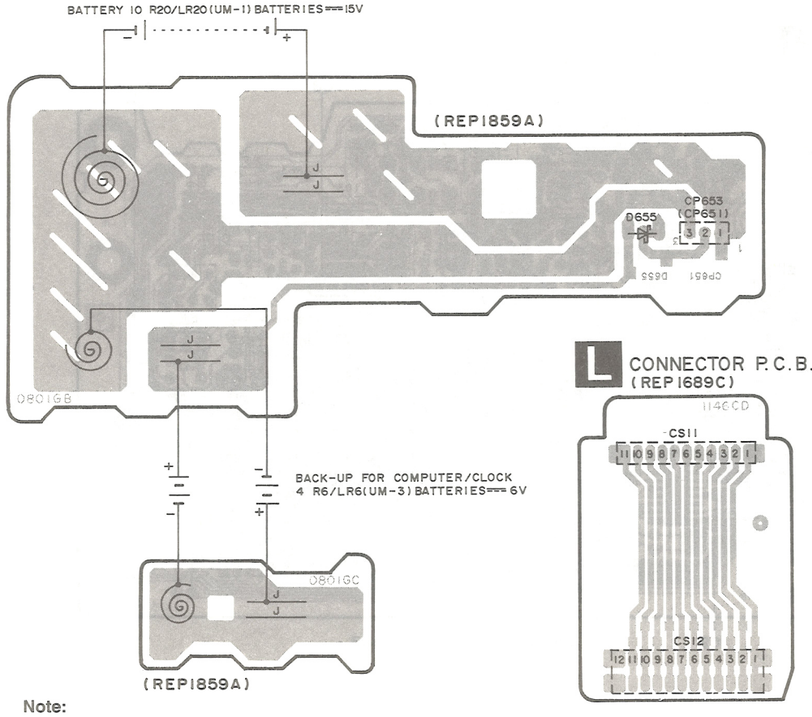

Q SENSOR P.C.B. (REP1689C)

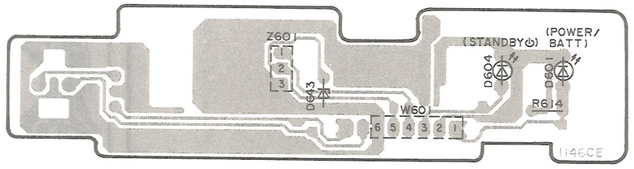

M LOADING MOTOR P.C.B. (REP0767)

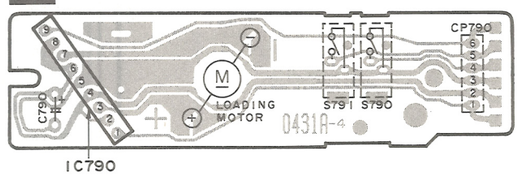

N TWEETER(R) P.C.B. (REP1689C)

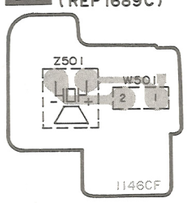

O TWEETER (L) P.C.B. (REP1689C)

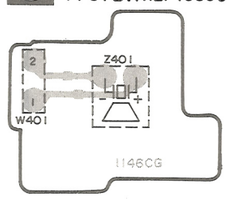

Note:
This circuit board diagram may be modified at any time with the development of new technology.

TA7358FMATEL	8Pin	LA1831MSATEL	24Pin
BU2042FE1	18Pin	AN8802SCE1V	32Pin
XLU2616F-E1	18Pin		

AN8389SE1

CXA1697QT6	48Pin
M62413FP	64Pin
MN66271RA	80Pin
MND3210REAN	100Pin

XRA6264FPE1

TA2011S	7Pin
TA7291S	9Pin

XRA5414

LA5609

XRA6418N

S-806H-T
S81350HG

BA7755A

2SA1309AIRTA
2SC2786LTA
2SC3311AIRTA
2SC3311R
2SC3312S
2SC3313B

2SD1450RTA
UN411FTA
2SD1450STA
UN4214TA

RVSGP2S24BC

RVTDTA123JST
RVTDTA143EST
2SC2389SSTA
DTC114EST

UN5114TX
2SB709S
2SB1218RTX
2SD1819RTX
2SD2436STXRA

2SJ40CDTA

2SK664TX

XN1210TX
XN1501TX

MA165
RVD1SR139TA
RVD1SS133TA
RVD1SS135TA

MA188TA

1N5402B-M21

MA165QZ

MA4051MTA
MA4082MTA

KV1360NT

LN873RPX-TA3

RVDMTZ6R8BTA
RVDMTZ8R2BTA
MTZ10CTA

SLR-305MC
SLR-305VC

KV1583BMTL

■ Wiring Connection Diagram

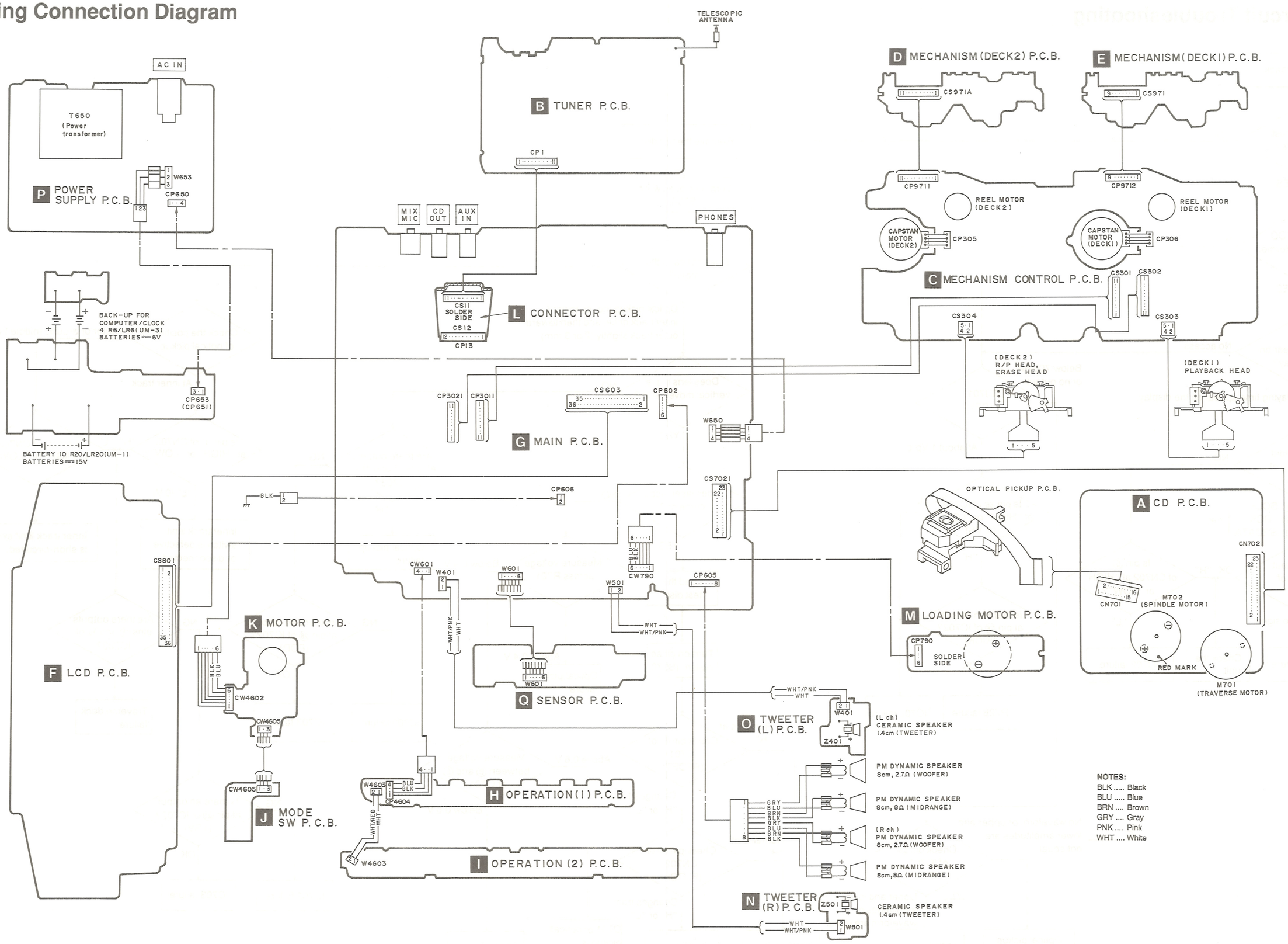

NOTES:
BLK ..... Black
BLU ..... Blue
BRN .... Brown
GRY .... Gray
PNK .... Pink
WHT .... White

■ CD Circuit Troubleshooting

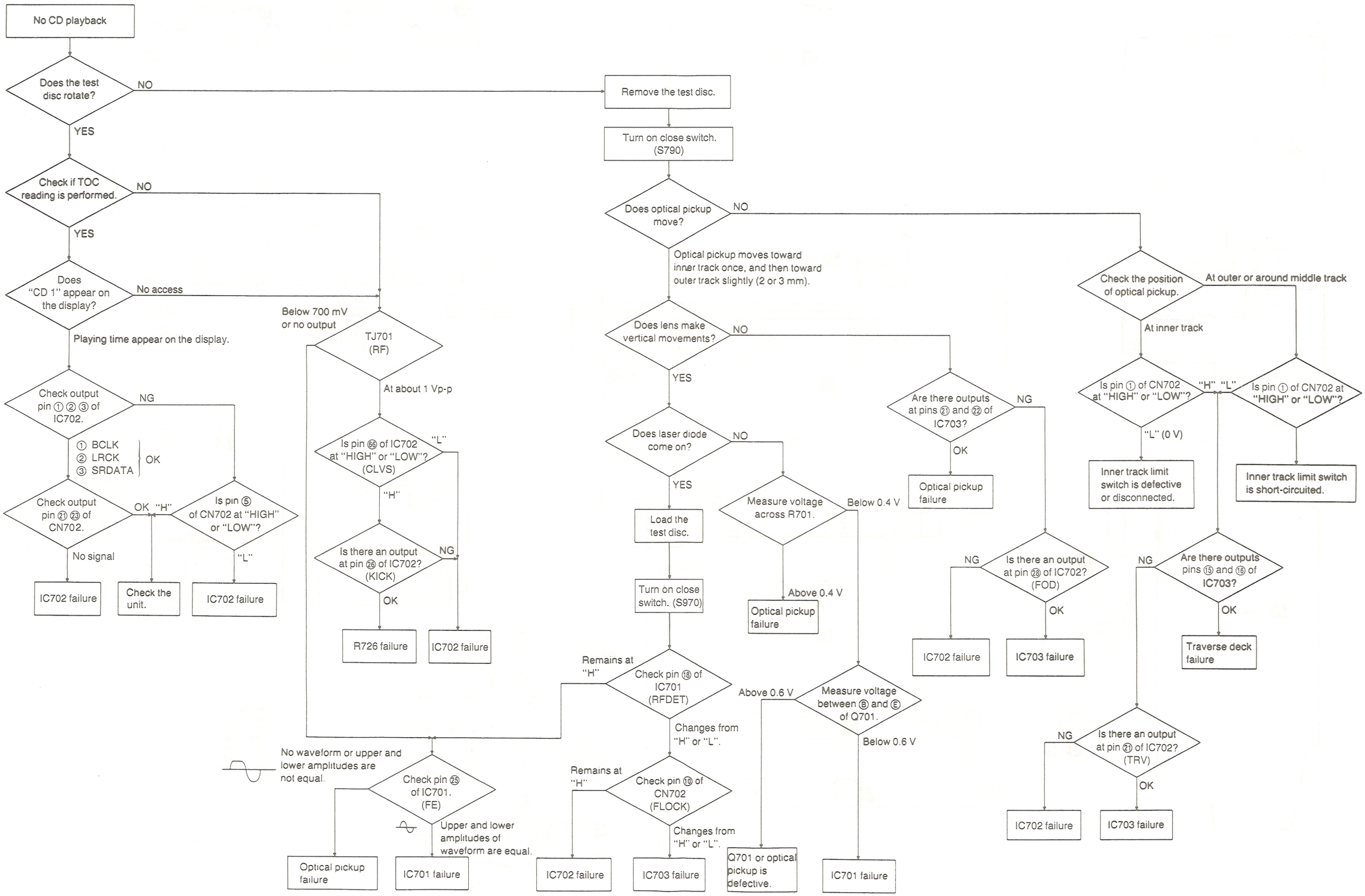

■ Mechanism Block Troubleshooting

The cassette deck of this model uses a new automatic loading type mechanism.
When repairing the cassette section, observe the following instructions that will help you repair it in a shorter time.

1. Preparation

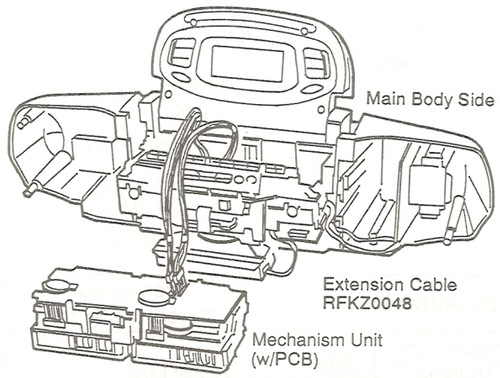

① Remove the mechanism unit from the unit.
(Refer to page 19.)
② Make connection between the main body side (CP3011, CP3021) and the mechanism unit (CS301, CS302) by extension cables. (Part No. RFKZ0048)
Carry out check, diagnosis and trobleshooting without separating the mechanism from the mechanism control P.C.B.

2. Main Block of Mechanism Control P.C.B.

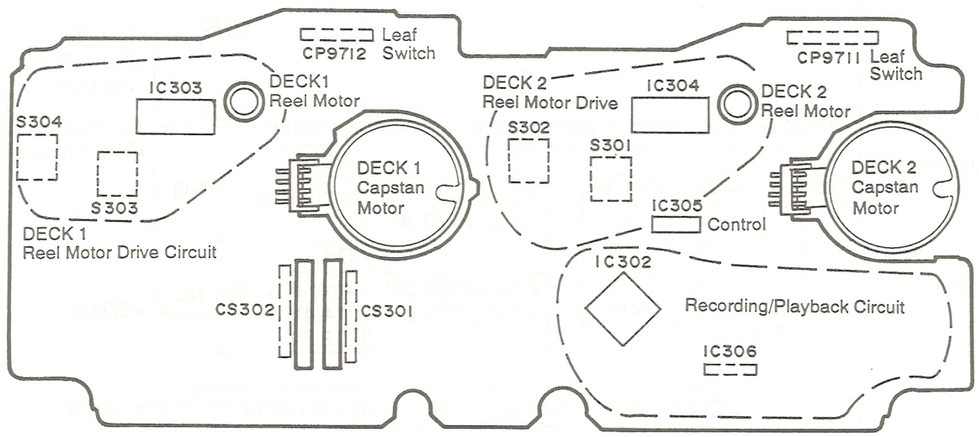

3. Object and Description

A troubleshooting guide is prepared for each main block of mechanism control P.C.B.
(Defective part can be determined by checking if the faulty condition is in the electrical section or in the mechanism even without removing the mechanism control P.C.B.)

- ○ Reel Motor Drive (Cassette Open/Close)
- ○ Capstan Motor
- ○ Leaf Switch and Plunger
- ○ Signal (Playback)
- ○ Mechanism

→ Check faulty condition.
→ Determine defective section.
→ Remedy

4. Summary of Troubleshooting Guide

Symptom	Checking Procedure	Presumed Defective Part
Open/close failure	Check reel motor terminal voltage. **OK** → Check continuity across both ends of reel motor. **OK**	Mechanism Block
	Normal voltage (13V when opening, 13V when closing) **NG**	Cassette Holder Open/Close Relations (See page 69.)
	Normal resistance (30 Ω approx.) **NG**	Reel Motor
Not operation Mechanism (Open/close O.K.)	Check capstan motor terminal voltage. **OK** → Check continuity across both ends of capstan motor. **OK**	Mechanism Block
	Normal voltage (15V approx. during playback) **NG**	Castan Motor, Reel Motor Relations (See page 70.)
	Normal resistance (100k Ω approx.) **NG**	Capstan Motor
No playback (Dead)	Check plunger terminal voltage. **OK** → Check continuity across both ends of plunger. **OK**	Mechanism Block
	Normal resistance (30 Ω approx.) **NG**	Plunger
	NG	Plunger, Leaf Switch Relations (See page 71.)
	Half switch and mode switch	
		Playback Relations (See page 72.)

5. Electrical Block Troubleshooting

Cassette Holder Open/Close Relations

Signal Route – DECK 1

※ Equivalent circuit is used for DECK 2, too.

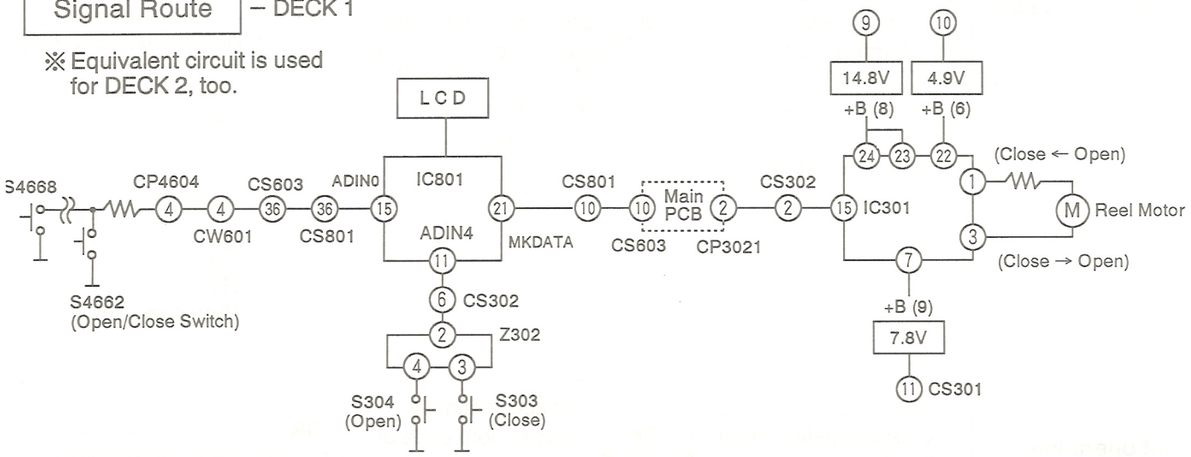

Symptom	Checking Procedure/Presumed Defective Part	Presumed Defective Block
1. Fails to open. 2. Fails to close.	Check reel motor voltage IC301 Pin ③ → IC301 ③ ① Voltage (13V) → OK: Mechanism Block, Reel motor; NG: IC301 ⑦, ㉒, ㉓, ㉔ Check +B voltage → OK: System Controller Line; NG: Check +B line CS302 ⑨ ⑩ CS201 ⑪ Check reel motor voltage IC301 Pin ① 13V / 0V / Pin ③ / GND 13V / 0V / GND	
3. Opens but closes soon.	S304 (Opening Detecton Switch) Z302 ④ Voltage 0V → Z302 ② Voltage 2.4V Z302 ② Voltage 1.2V 4.15V	• System Controller Line • Z302 • S304 • Mechanism Block
4. Closes but opens soon.	S303 (Closing Detection Switch) Z302 ③ Voltage 0V → Z302 ② Voltage 1.2V Z302 ② Voltage 2.4V 3.8V	• System Controller Line • Z302 • S303 • Mechanism Block
System controller line	Check tact switch and system controller by self-check function. (See page 85.)	

Capstan Motor and Reel Motor Relations

Signal Route – DECK 1

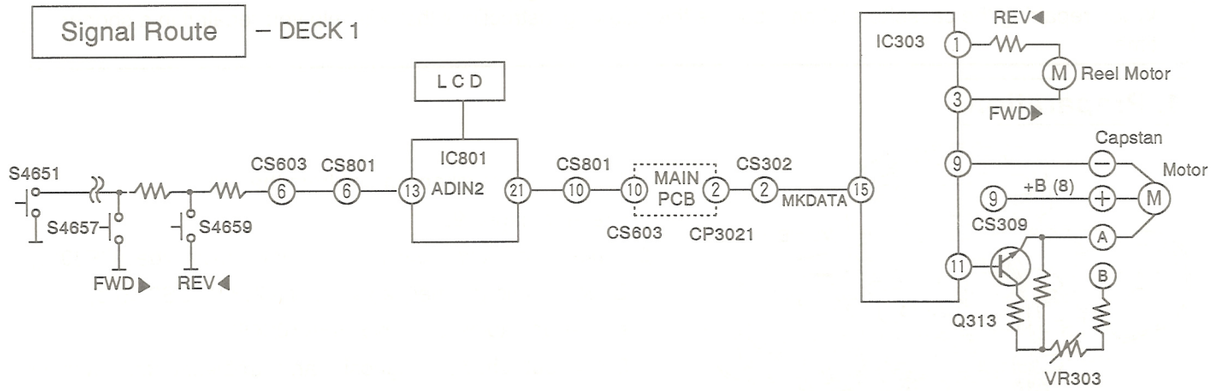

Symptom	Checking Procedure/Presumed Defective Part	Presumed Defective Block
1. Reel motor fails to rotate during playback.	Check voltage at IC303 ① ③. → Voltage → OK: • Reel Motor • Mechanism Block NG → IC303 +B (+3.6V)Check → OK: • IC303 NG: • MDATA • Tuner/Connector Relation ③ +3.6V GND FWD ▶ ① +3.6V REV ◀	
2. Capstan motor fails to rotate during playback.	FWD ▶ Check capstan motor voltage (constant speed) → OK: • Capstan Motor • Mechanism Block NG → Check MOTOR Terminal ⊖ when FWD ▶ 0V → NG: • IC303 OK → Check MOTOR Terminal Ⓐ, Ⓑ when FWD ▶ Ⓐ 14.4V Ⓑ 12.8V → NG: • Q313 Check +B(8) – CS309 ⑨ when voltage is not 14.7V. → • +B (8) MOTOR / STOP / FWD ▶: ⊖ 14.7V 0V; ⊕ 14.7V 14.7V; Ⓐ 14.7V 14.4V; Ⓑ 14.7V 12.8V	
3. Capstan motor	Capstan motor judgment criterion: Motor rotates when 14.7V approx. is applied between ⊕ and ⊖ terminals of the motor, and 1.6V approx. between A and B.	• Replace motor if it fails to rotate.
4. No constant-speed rotation.	Check Q313 base voltage (14.1V). (Q313 OFF) → OK: • Motor is defective. • Adjust VR303. NG: • IC303	
5. No double-speed rotation	Check Q313 base voltage (13.7V). (Q313 ON) → OK: • Q313 is defective. • Motor is defective. NG: • IC303	

Leaf Switches and Plunger Relations

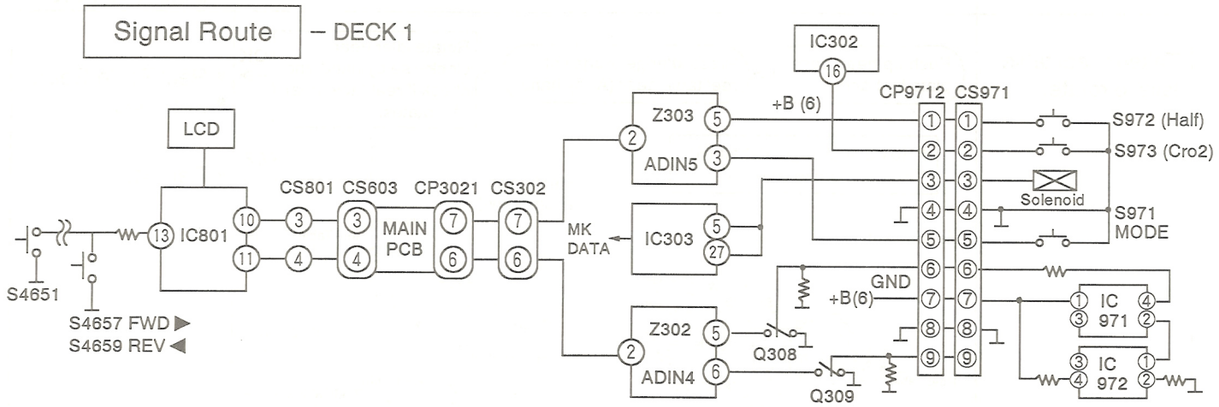

Symptom	Checking Procedure/Presumed Defective Part	Presumed Defective Block
1. Play-stop repeated.	Check voltage at CS971 Pin ⑤ during playback, H (4.9V). → H(4.9V) Remains H as it →	• S971
	L (0V) → Z303 ② 1.1V → NG	• Z303
	OK → Check IC801 Pin ⑪ 1.1V → NG	• IC801/LCD
2. No cassette mark indicated on LCD.	CS971 ① No cassette (4.9V). → Cassette extists (0V). → NG	• S972
	OK → Z303 ② 4.3V → 3.7V → NG	• Z303
	OK	• IC801/LCD
3. Plunger fails to work.	130ms / 65ms, 14.5V, Play	
	Voltage applied to CS971 Pin ③ ? → OK (14.5V) → Check plunger resistasnce, 30 Ω approx → NG	• Plunger
	NG (0V)	• CS971 • IC303
4. No counter indication on LCD.	Check CS971 Pins ⑥, ⑦ waveform. → NG (0.5 ~ 0.6V, Varies depending upon tape position.)	• IC971/IC972
	Voltage waveform appears; Check Z302 ⑤, ⑥ waveform → NG (5.0V)	• Q308/Q309

Playback Signal Relations

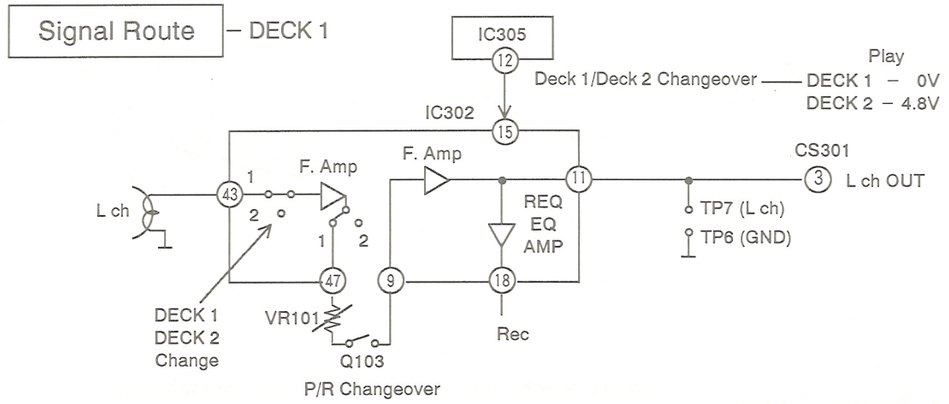

Symptom	Checking Procedure/Presumed Defective Part	Presumed Defective Block
1. L ch dead.	Check playback level by using test tape (QZZCFM). (See page 88.) → NG	
	Reference signal – 11dB output between TP5 and TP6. → OK	• CS301 and those that follow – AMP
	NG → Sequentially check IC302 output line.	• IC302 • Head
	(Head Output ㊸→㊼→⑨→⑪ Sequantially check output.)	
2. No changeover between Decks 1and 2.	Deck 1/Deck 2 Changeover Signal	
	Check IC302 Pin ⑮ voltage. → Check IC305 Pin ⑫ voltage.	• IC302
	DECK 1 Play 0V, DECK 2 Play 4.8V – No changeover takes place.	

Deck 1/Deck 2 (L-CH) – (R-CH) Pin Number of IC302.

	DECK 1		DECK 2	
	L ch	R ch	L ch	R ch
IC302 Head Input	㊸	㊷	㊹	㊶
F-Amplifier Output	㊼	㊳	㊽	㊲
Playback Level Adj. VR	VR101	VR201	VR102	VR202
Input after Level Adjustment	⑨	㉘	⑨	㉘
Output	③	㉖	③	㉖

6. Mechanism Block Troubleshooting

Surface Mechanism

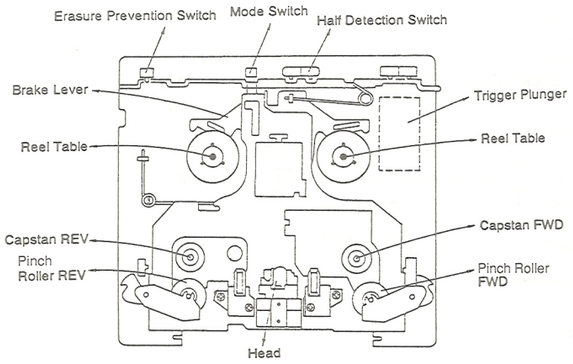

Backside Mechanism

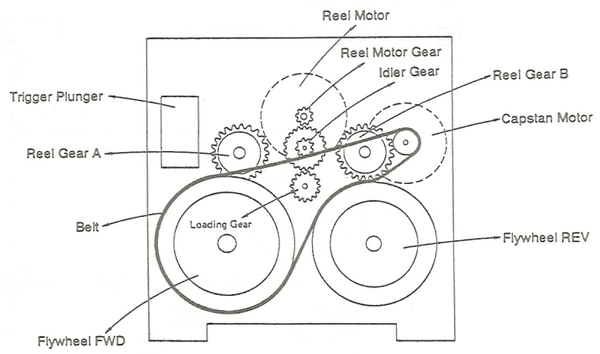

Preparation before Check

Remove mechanism control P.C.B. and cassette holder.
Separate loading chassis from mechanism.

Symptom	Checking Procedure	Presumed Defective Part
Open/close failure.	Check drive rack by moving Up and Down by hand. → Drive rack, friction gear, intermediate gear, and loading gear move smoothly? OK → • Reel Motor Gear • Idler Gear NG → • Drive Rack • Friction Gear • Intermediate Gear • Loading Gear	
• Head base plate fails to ascend. • Pressure roller fails to ascend.	Raise trigger lever by hand ① → Main gear moves a little in direction ②? OK → FWD flywheel moves a little in direction ③? NG → • Main Gear • Flywheel OK → • Trigger Lever • Main Gear Rotate flywheel in direction ③ by hand. → Head base plate ascends? OK → Capstan and pressure roller come into close contact? NG → • FWD/REV Rod • Pinch Roller • Spring NG → • Main Gear • Head Base Plate • Head Spring	

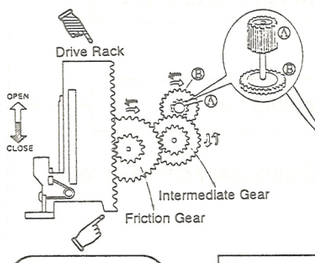

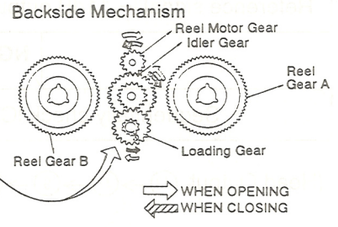

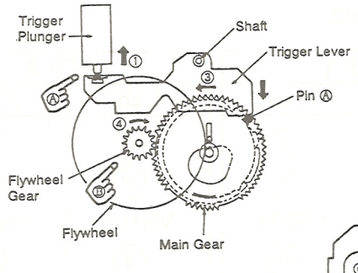

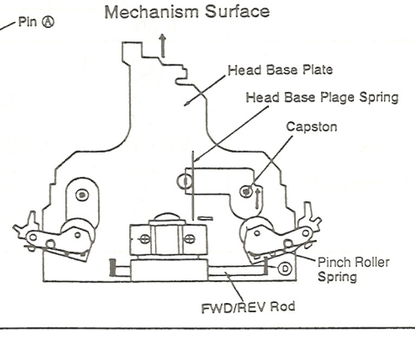

Mechanism Block

Symptom	Checking Procedure	Presumed Defective Part
Takeup reel table fails to rotate.	Push up head base plate by hand. → Press idler gear against reel table gear (A) by hand. → Rotate idler gear clockwise by hand and check if reel table gear (A) rotates. OK → • Reel Table Gear. • Idler Gear YES → • Reel Motor * Release idler gear shaft (B) * Release brake lever.	

Mechanism

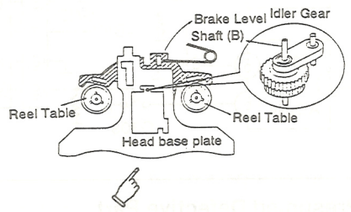

Mechanism (Rear View)

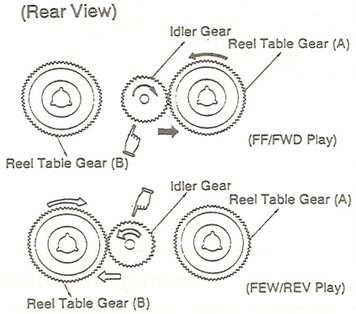

7. Trouble Examples (Cassette Deck)

Symptom	Cause	Remedy
① Unusual noise is heard during playback.	Head is dirty.	Clean it.
② Running tape makes noise.	Pressure roller spring has slipped off.	Replace the pressure roller.
③ Speed of rotation is too high.	Pressure roller spring has slipped off.	Replace the pressure roller.
④ Tray comes out soon.	Drive rack gear teeth deviated.	Replace drive rack.
⑤ Stops at times during playback. (Deck 1)	CS971 (CP9712) Pins ①, ③ have been soldered improperly.	Solder correctly. ① HALF (S972) ③ SOLENOID
⑥ No counter indication during playback. (Deck 2)	CP9711 Pins ⑤, ⑧ have been soldered improperly.	Solder correctly.
⑦ No playback.	Leaf switch has been broken.	Replace leaf switch.
⑧ Cassette holder fails to close. (Deck 1)	IC303 is defective.	Replace IC303.
⑨ Cassette holder fails in opening and closing, and power supply turns off. (Deck 2)	IC304 is defective.	Replace IC304.
⑩ Tape gets entangled in.	Reel motor is defective.	Replace reel motor.
⑪ Cassette holder fails in opening and closing.	Drive rack gear is defective.	Replace drive rack.
⑫ No FWD play. (REV Play O.K.)	FWD/REV lever is defective.	Replace FWD/REV lever.
⑬ No FWD play. (REV Play O.K.)	FWD/REV spring is defective.	Replace FWD/REV spring.
⑭ No azimuth adjustment can be made.	Head spring is defective.	Replace head block.

8. Mechanism Block Operation

1) Block Diagram (DECK 1 only)

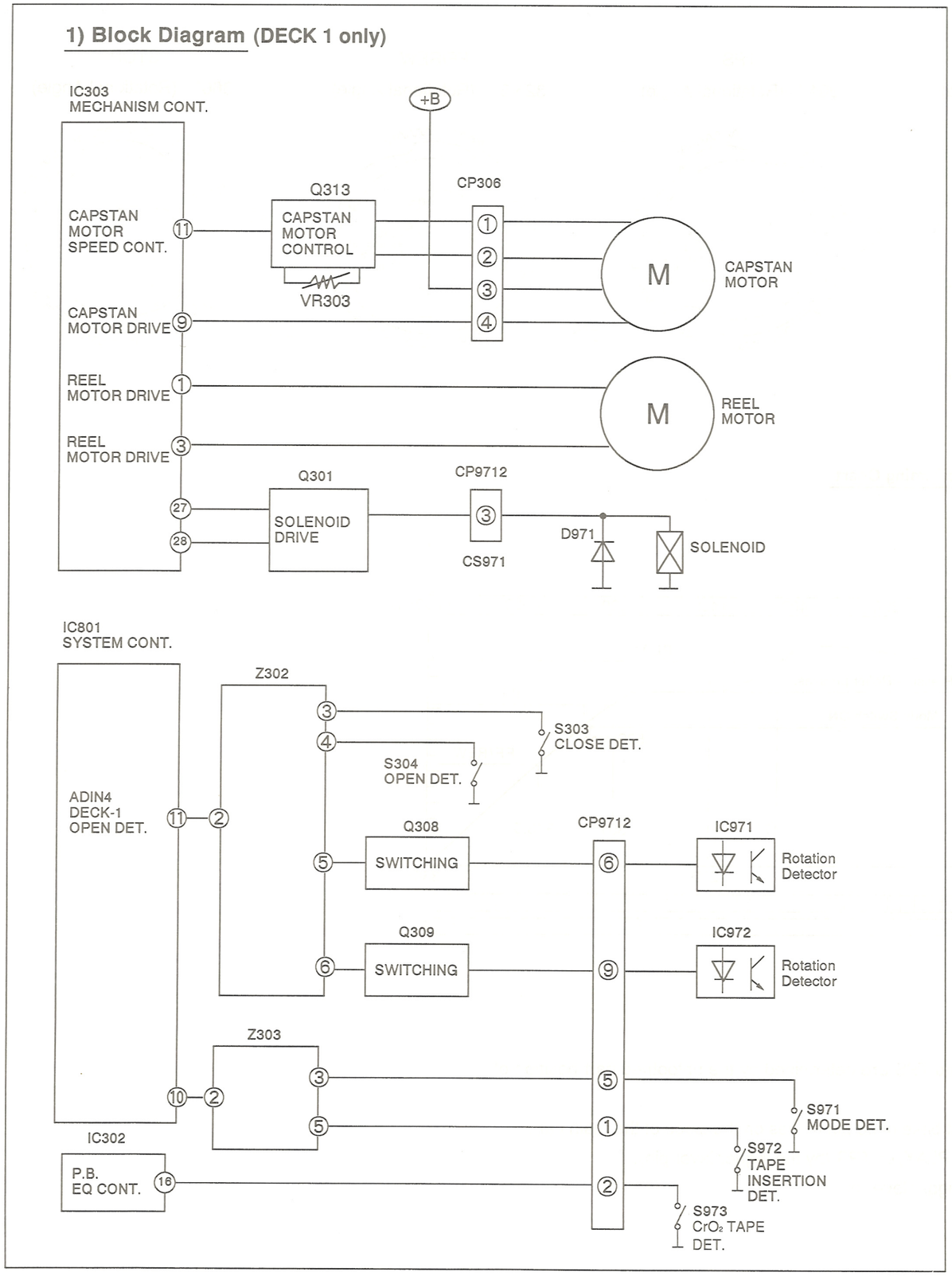

2) Main IC Pins

■ **Explanation of Mechanism Control (for DECK 1 Only)**

IC	Pin No.	Discription
IC303	9 11	Capstan motor control signal output. Pin No. / STOP / NORMAL SPEED / HIGH SPEED 9 / 14.7 / 0.1 / 0.1 11 / 14.4 / 14.1 / 15.0
		Reel motor control signal output. Pin No. / STOP / FWD PLAY / REV PLAY / NORMAL FF 1 / 0 / 0.2 / 3.9 / 0.8 3 / 0.1 / 4.0 / 0.2 / 7.2 Pin No. / NORMAL REW / HIGH SPEED FF / HIGH SPEED REW 1 / 7.2 / 0.1 / 11.2 3 / 0.1 / 11.2 / 7.2
	27 28	Solenoid drive control signal output. Pin No. / OFF / HOLD 27 / L / H / FF/FEW 7.3V H = 7.3V 28 / L / H / FF/FEW 0V H = 9V
IC801	11	Reel table gear rotation detection signal input. Reel talbe gear 1 rotation produces 12 pulses. 5V 0V Cassette holder open/close detection switch signal input.
	10	Reel table gear rotation detection signal input. Half detection switch signal input.
IC302	16	Tape select switch signal input.

3) Cam Gear Action

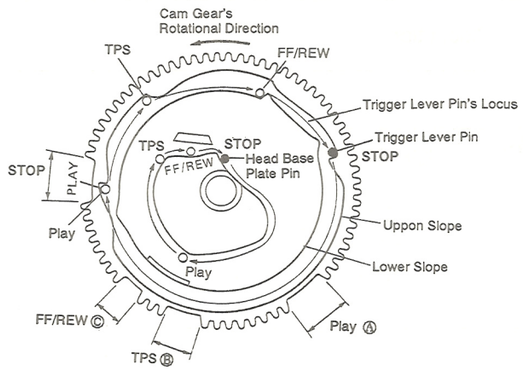

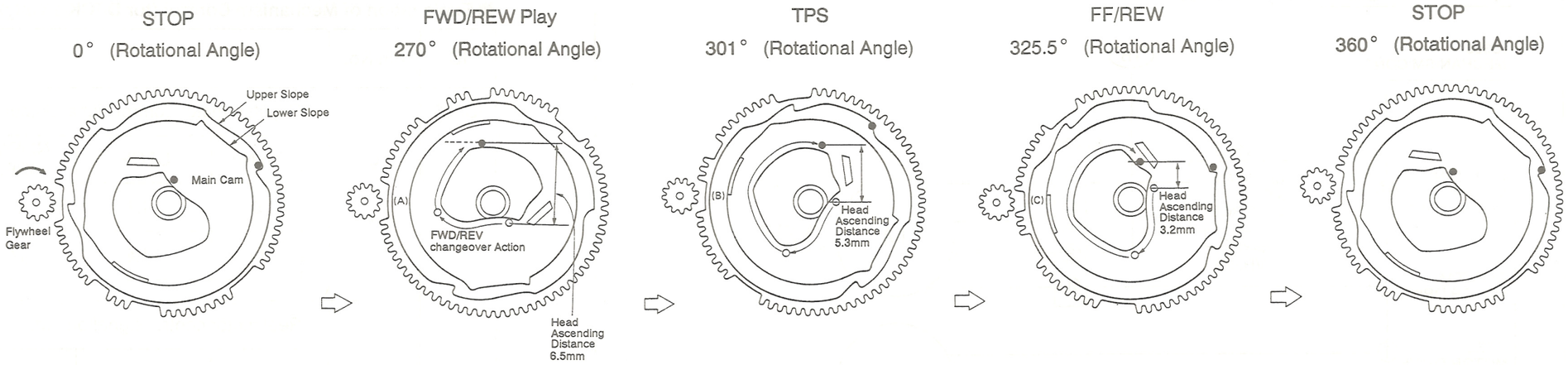

Main Gear Basic Timing Chart

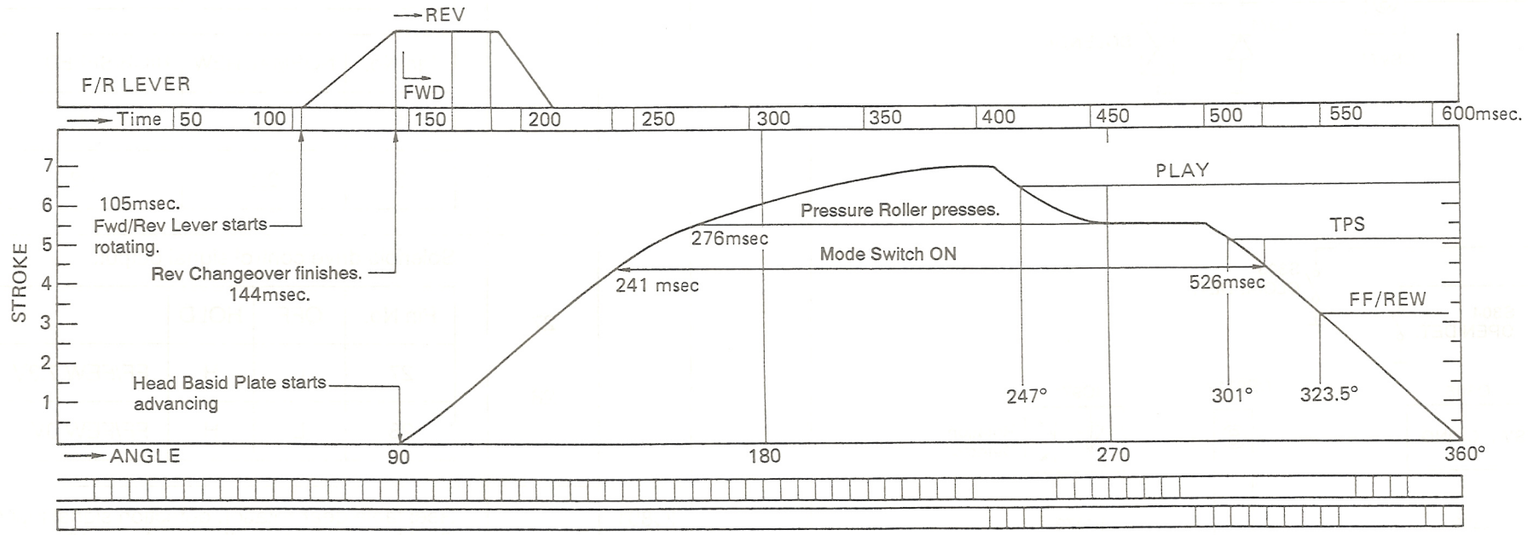

- Flywheel Gear ——→ rotates clockwise.
- Cam Gear ——→ rotates counterclockwise.
- The four modes of STOP, F PLAY/R PLAY, FF/REV, and TPS are determined by the untoothed part position of the cam gear.
- The head base plate ascends and descends as the heat base plate pin moves on the slope of the main cam.
- Position is held at the upper slope for STOP, F PLAY/R PLAY, or TPS (by the trigger lever pin).
- Position is held at the lower slope for FF/REW (by the trigger lever pin).

8. Time Chart

STOP → F. PLAY (▶)

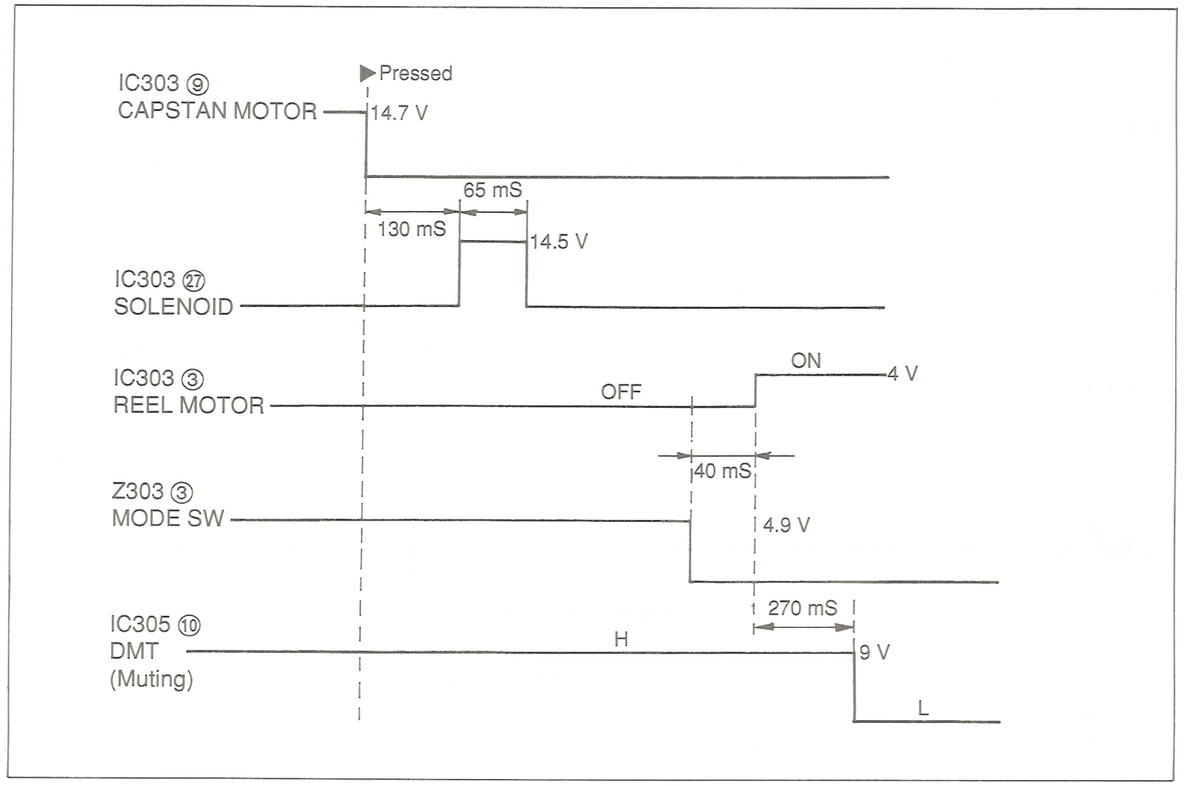

●Pressing the PLAY (▶) key during the cassette holder closed (with tape loaded) causes the capstan motor rotation command to change from H to L level and makes the capstan motor rotate.

●130 mS after the capstan motor starts running, the plunger attraction command (IC303 ㉗) turns to H level for 65 mS and the plunger is attracted instantaneously.

●As the head base plate ascends, the mechanism mode switch turns ON, the mode switch changes from H to L level. About 40 mS later, the reel motor FWD rotation command (IC303 ③) changes from L to H level and the reel motor is rotated in the FWD direction.

●Muting (for music signal) is canceled 270 mS after the reel motor starts rotating in the FWD direction.

*If the mechanism mode switch fails to turn ON within 800 mS after the plunger is attracted, the mechanism is reset (into the STOP mode).

STOP → R. PLAY (◀)

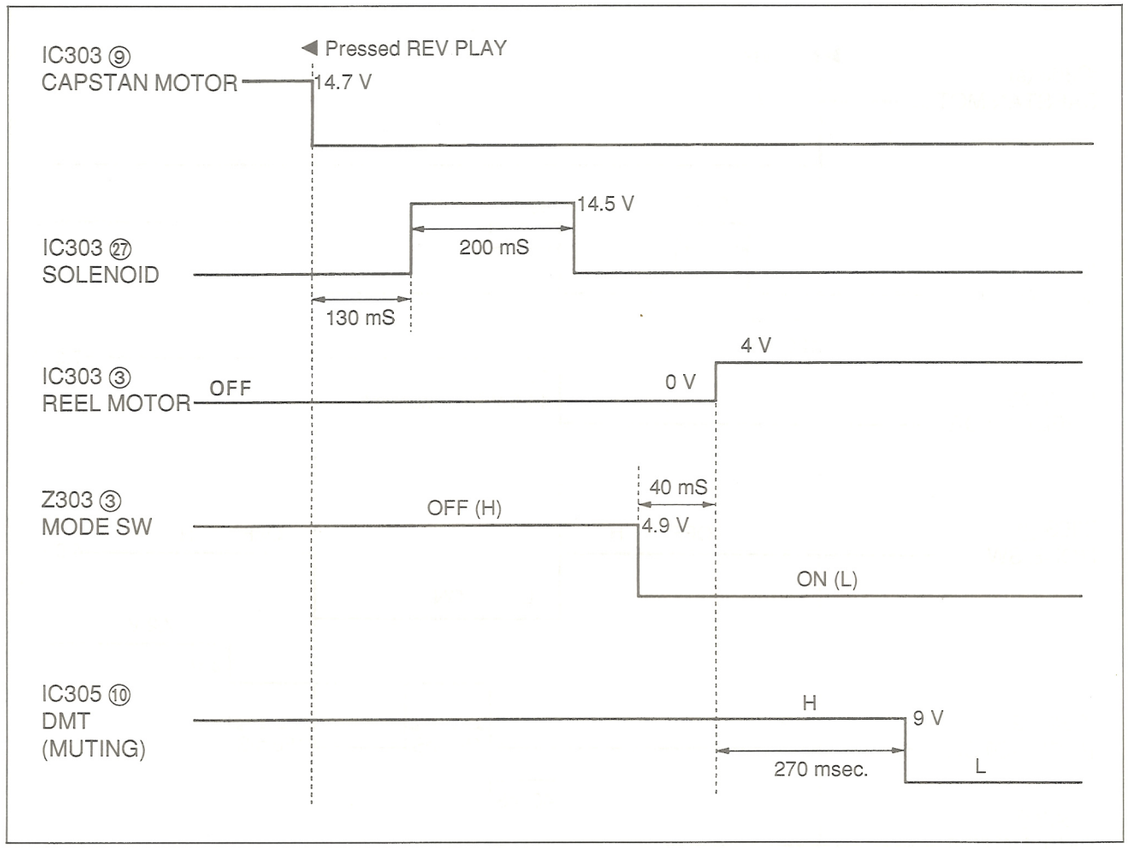

●Pressing the PLAY (◀) key during the LOADING CLOSE time (with tape locked) causes the capstan motor rotation command to change in level from H to L, thereby rotating the capstan motor.

●130 mS after the capstan motor starts rotating, the plunger attraction command (IC303 ㉗) changes in level to H for 200 mS, bringing the plunger into the state of attraction for 200 mS.

●As the head base plate ascends, the mechanism mode switch turns ON, and the mode switch changes in level from H to L, and 40 mS later, the reel motor REV rotation command (IC303 ③) changes in level from L to H and the reel motor rotates in the REV direction.

●Muting (music signal) is canceled 270 mS after the reel motor starts rotating in the REV direction.

*If the mechanism mode switch does not turn ON within 800 mS after attraction of the plunger, the mechanism is placed into the reset (STOP) mode.

STOP → FF (▶▶)

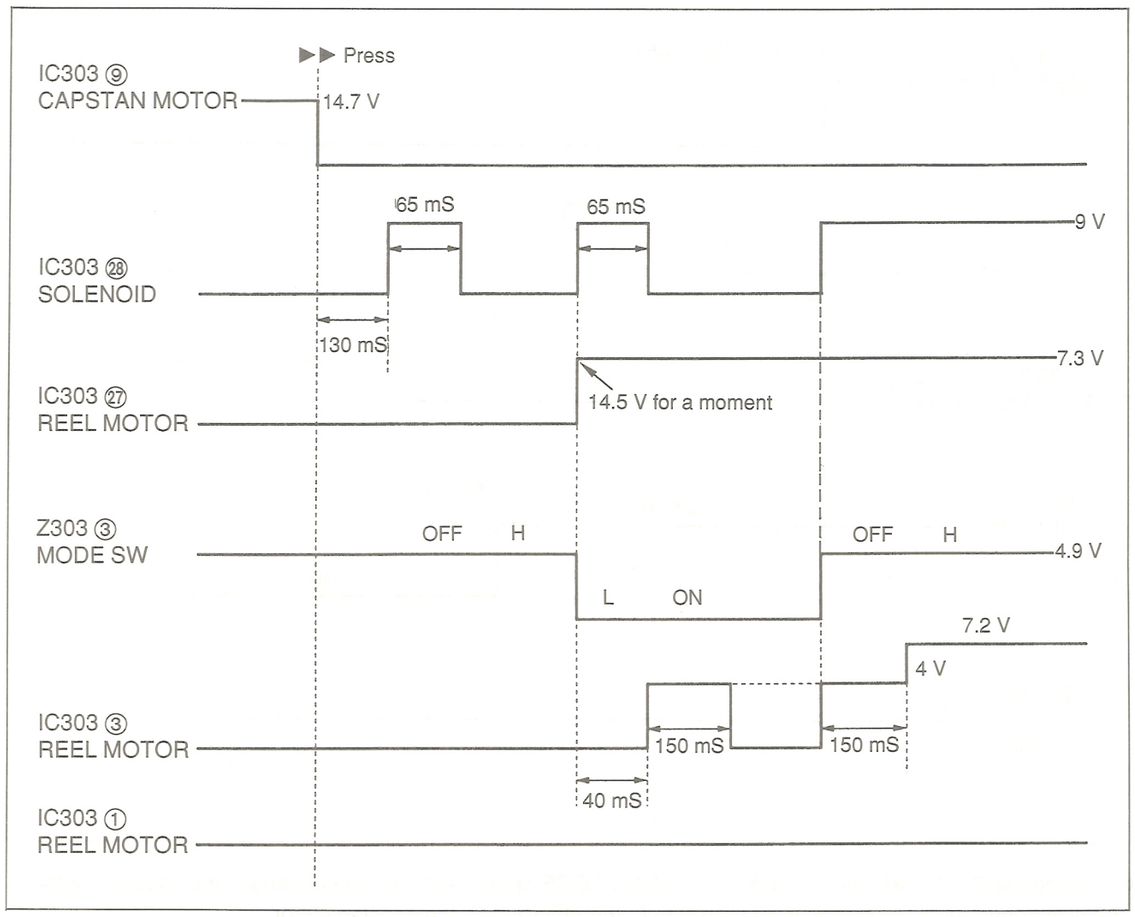

- Pressing the FF key causes IC303 ⑨ (capstan rotation command) to change in level from H to L, and the capstan motor starts rotating.

↓

- 130 mS after the change of the level of IC303 ⑨ to L, IC303 ㉘ (solenoid attraction command) changes in level to H.

↓

- The head base plate ascends, and at the same time that it turns the mechanism mode switch ON, IC303 ㉘ is again changed in level to H for 65 mS. And simultaneously IC303 ㉗ (solenoid attraction hold command) is changed in level to H, and this state is held until FF action comes to a stop.

↓

- The mode switch turns ON, and 40 mS later, IC303 ③ (reel motor FWD rotation command) is kept at the 4 V level for 150 mS. (Looseness straightening action)

↓

- At the same time that the mode switch turns OFF, IC303 ③ is changed again from 4 V (150 mS) to 7.2 V and FF speed begins.

STOP → REW (◀◀)

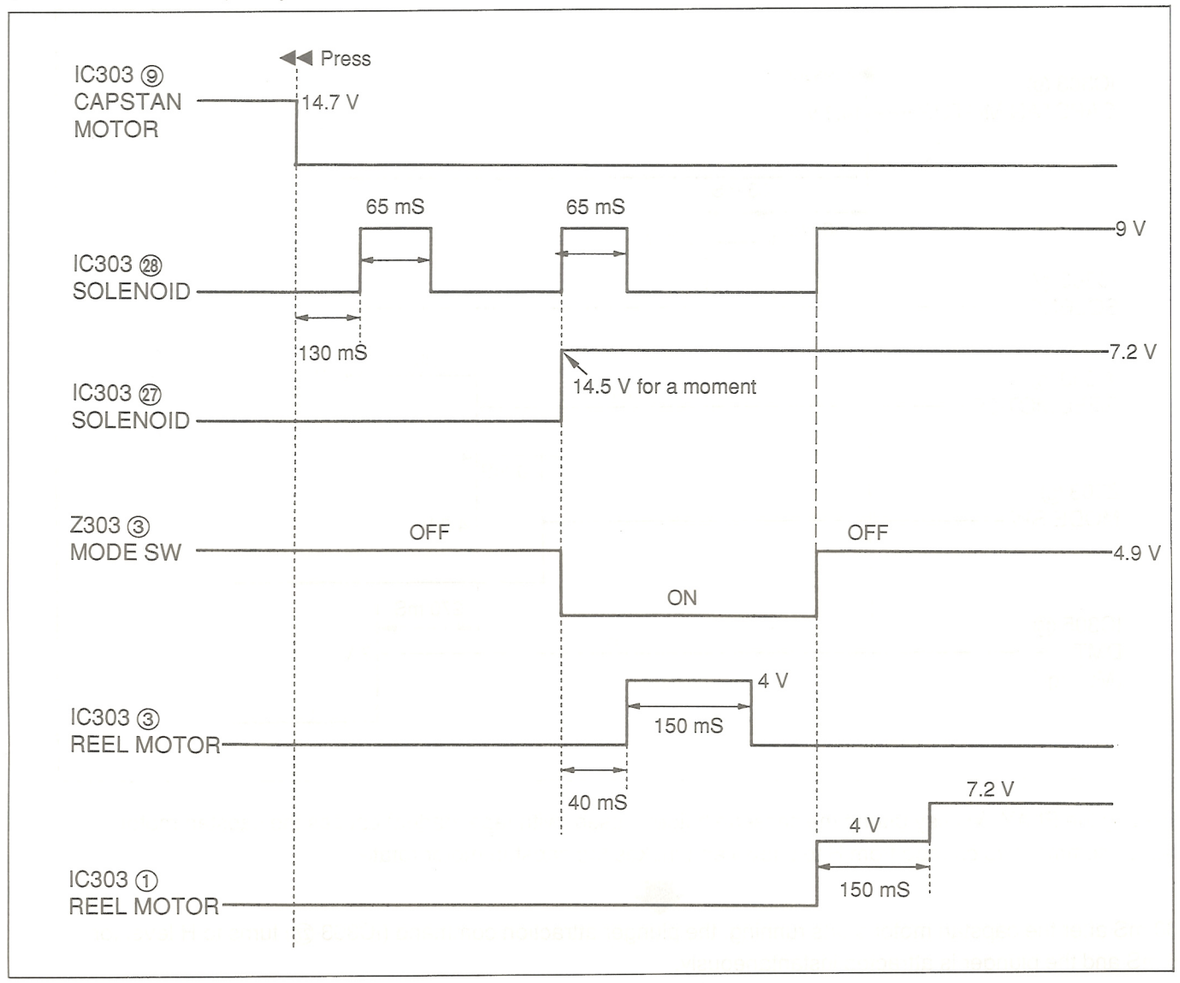

- Differs from FF action in that IC303 ③ and IC303 ① are in reverse order, but remains the same in other points.

LOADING (CLOSE → OPEN)

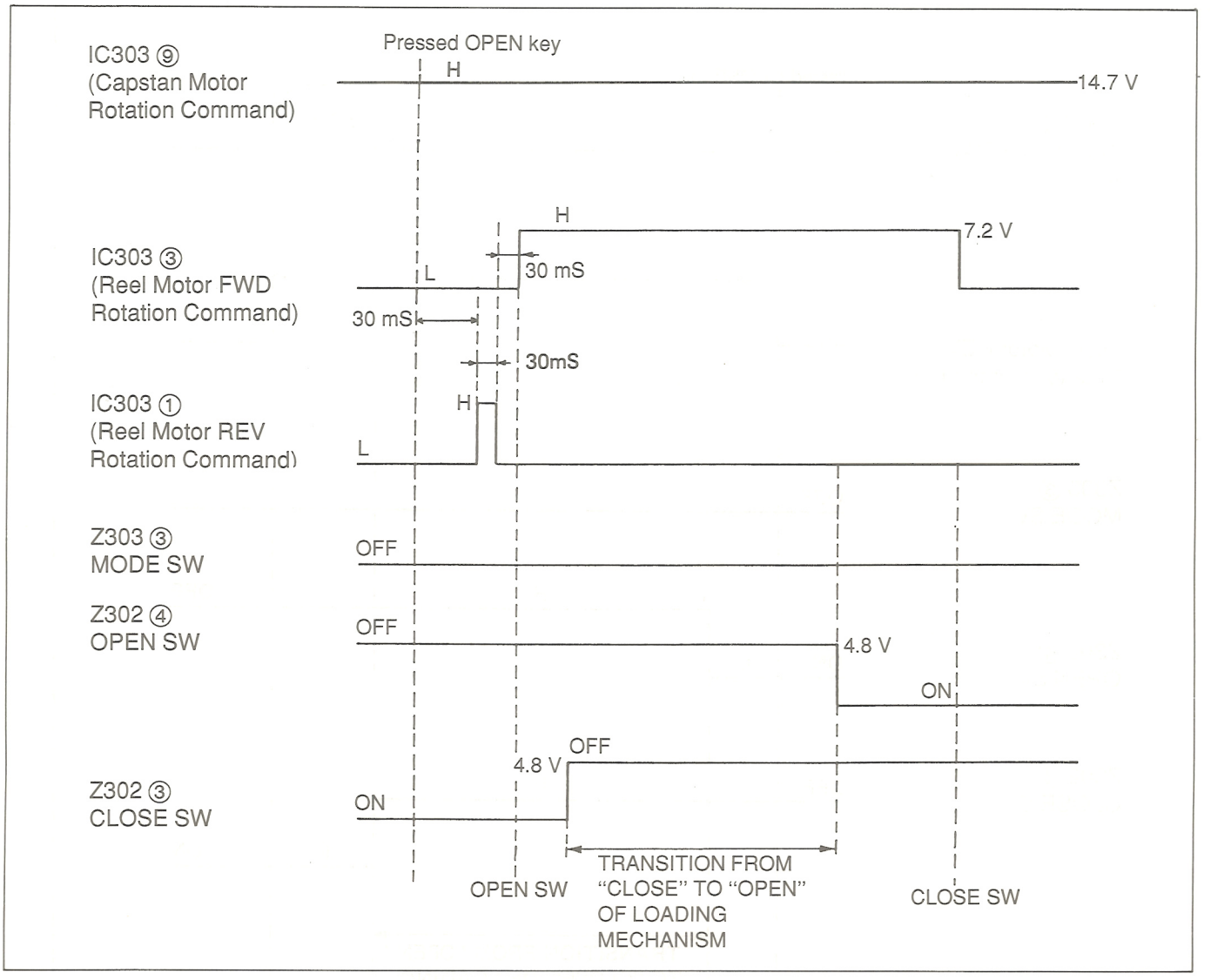

- Pressing the OPEN key from the state of CLOSE causes the capstan motor to rotate for 100 mS to forcibly move down the head base plate in case it has not descended completely even with the mode switch set at OFF.

↓

- The reel motor is rotated in the REV direction for 30 mS to forcibly return the idler gear to the neutral position.

↓

- 30 mS later, the reel motor FWD rotation command (IC303 ③) changes from L to H level, and the reel motor rotates in the FWD direction. (Loading action starts.)

↓

- The CLOSE detection switch changes from ON to OFF.

↓

- The OPEN detection switch changes from OFF to ON, and simultaneously the reel motor REV rotation command (IC303 ①) turns from L to H level for 200 mS. (Brake action)

↓

- Then the IC303 ① and IC303 ③ commands are turned to L level and the reel motors are stopped.

LOADING (OPEN → CLOSE)

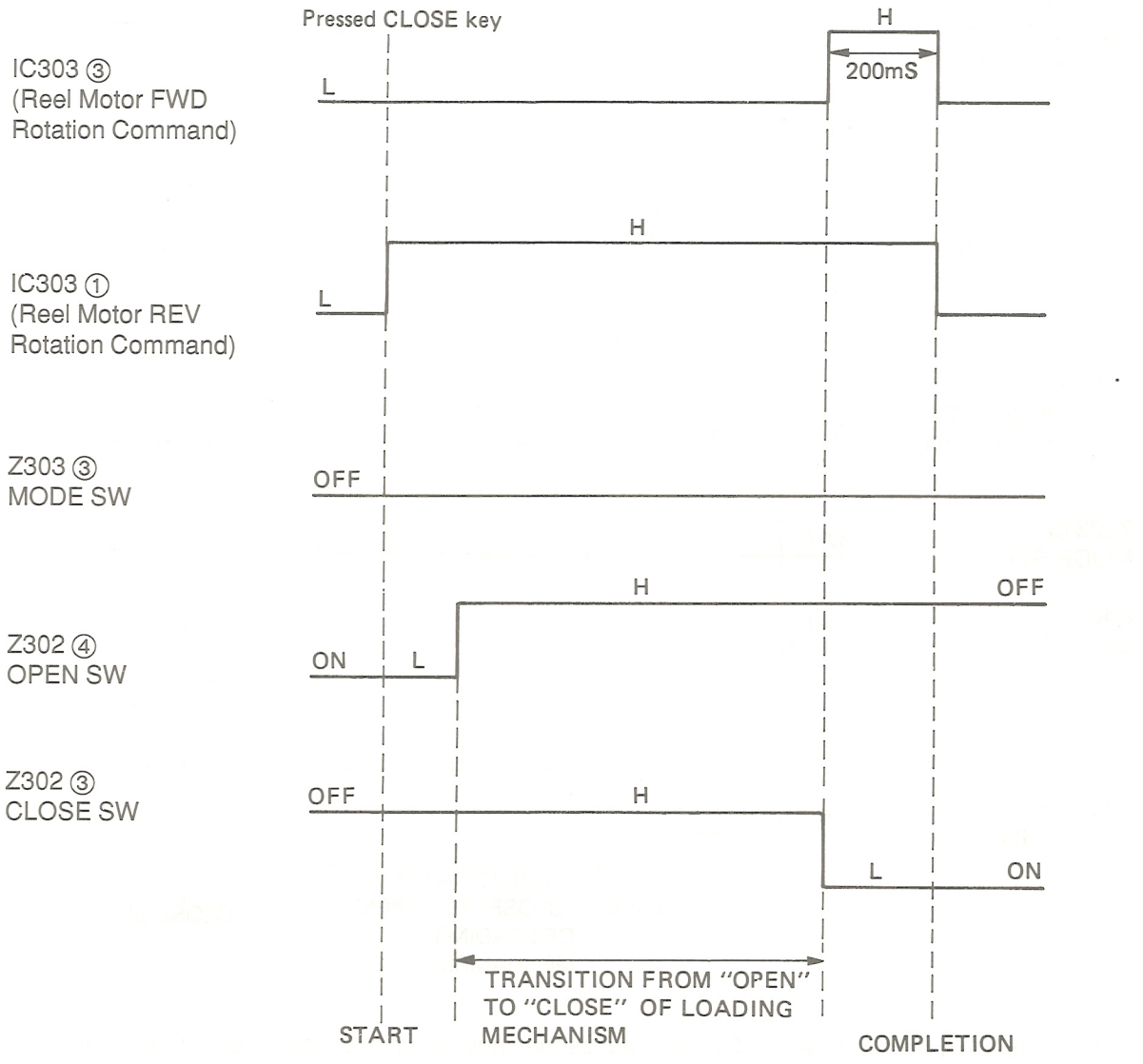

- Pressing the CLOSE key from the state of OPEN causes the reel motor REV rotation command (IC303 ①) to turn to H level and the reel motor rotates in the REV direction.(Loading action starts.)

- The OPEN detection switch changes from ON to OFF.

- The CLOSE detection switch changes from OFF to ON, and simultaneously the reel motor FWD rotation command (IC303 ③) turns from L to H level for 200 mS. (Brake action)

- 200 mS later, the IC303 ① and IC303 ③ commands are turned to L level and the reel motors are stopped.

■ Self Check Function

The self check function is equipped with this unit, and the condition of the unit can be checked using this function. Use this function before or after repair.

●SETTING OF SELF CHECK FUNCTION

1. Connect the AC power cord of this unit to an AC outlet and turn the unit on.
2. Press the numeric keys "4" and then "7" on the remote controller while holding down the tape stop (□) button on this unit. The LCD indicators will appear as shown in Fig. 1.
   (This display indicates the self check mode is ON.)

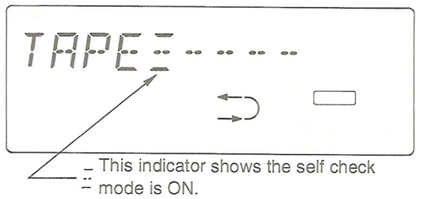

Fig. 1

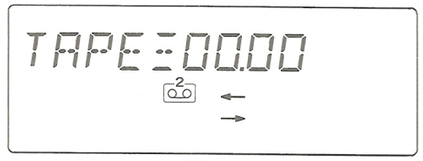

Fig. 2

●CHECK OF TAPE EDIT OPERATION

1. Insert a blank tape with erase-prevention tabs into each tape deck 1 and 2.
   Note: When a tape with no erase-prevention tabs is inserted, an error indicator will appear on the LCD and the self mode check will be cancelled. During this check mode, the audio volume will come to the maximum level automatically. Therefore, when using a recorded tape, be sure to insert the plug of headphone into the headphones jack.
2. Press the numeric key "1" on the remote controller. (High speed edit will start.)
3. Press the tape stop (□) button on the remote controller after a while (after approx. 20 seconds) to stop the tape.
4. Press the rewind (◁◁ TPS) button on the remote controller. (Tape will be rewound.)
5. If the tape is automatically stopped at "00.00" position on the counter (refer to Fig. 2) and self check mode is not cancelled, the tape edit system circuit is proved to be normal.

Segment	Button	Segment	Button	Segment	Button	Segment	Button
①	AUTO CD RECORD	⑪	SET	㉑	FWD▷	㉛	DECK1
②	TAPE EDIT	⑫	FWD/+	㉒	DECK1/2	㉜	———
③	TAPE PAUSE	⑬	−/REV	㉓	TUNER/BAND	㉝	DECK2
④	TIMER	⑭	◁◁	㉔	▷/▯▯	㉞	VOL −
⑤	PRESET EQ	⑮	▷▷	㉕	□/CLEAR	㉟	VOL +
⑥	MAIN MENU SELECT	⑯	◁REV	㉖	−/⏮	㊱	CD
⑦	SUB EDIT SELECT	⑰	□	㉗	⏭/+	㊲	COBRA TOP

Table 1

●CHECK OF MALFUNCTION OF SWITCHES (TACT SWITCHES)

1. Press the numeric key "3" on the remote controller.
2. All indicators on the LCD will disappear and back lights on the menu LED and LCD will flash on and off.
3. When the tact switches except POWER switch are pressed in sequence, the corresponding indicators will appear on the LCD as shown in Table 1 and Fig. 3.
   Note: Do not press POWER switch. If the switch is pressed, the unit is turned off and self check mode is cancelled.
4. When the display in Fig. 4 appears, all tact switches are normal.
   If any indicator does not appear on the LCD, the corresponding switch is considered abnormal.

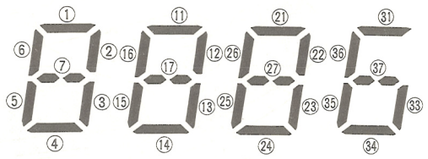

Fig. 3

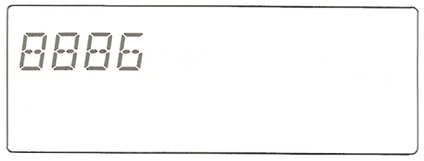

Fig. 4

●CHECK OF TPS OPERATION

1. Insert a musical tape with no erase-prevention tabs into each tape deck 1 and 2.
   (Make the tape rewound till near the center position.)
   Note: If a tape with erase-prevention tabs is inserted, an error indicator will appear and self check mode is cancelled.)
2. Press the numeric key "7" on the remote controller. (This unit will start the following operations automatically.)

DECK1 FWD PLAY → DECK1 FWD REW•TPS START → DECK1 FWD REW•TPS END → DECK1 FWD PLAY → DECK1 STOP →

DECK2 REV PLAY → DECK2 REV FF•TPS START → DECK2 REV FF•TPS END → DECK2 REV PLAY → DECK2 STOP

3. If the self check mode is not cancelled after all operations are finished, the TPS circuit is proved to be normal.

●CHECK OF ALL INDICATORS ON THE LCD

1. Press the numeric key "8" on the remote controller.
2. All the LCD indicators will go on. (Refer to Fig. 5.)
   If any indicator does not appear, the LCD or LCD drive circuit is considered abnormal.

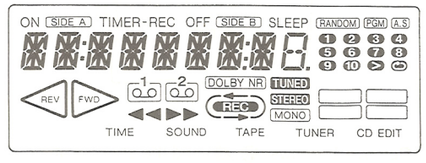

Fig. 5

■ Preparations for Check and Adjustment of P.C.B.

●Fabricate the measuring instrument as shown below to measure the audio output from the headphones jack for check and adjustment of the P.C.B.

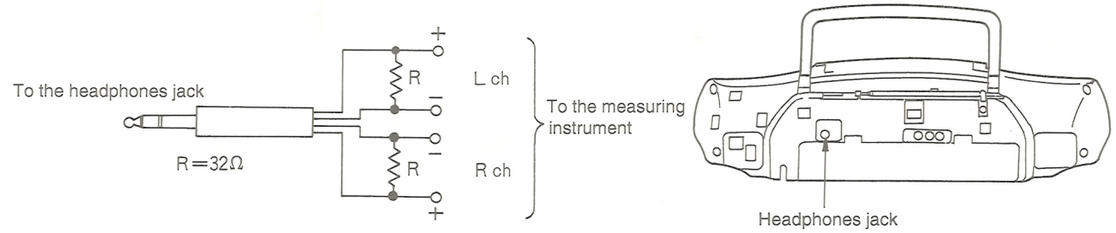

●When you measure the audio output from the speaker without using the measuring instrument for the headphones output, make connections as shown below.

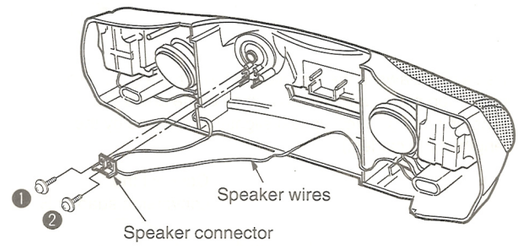

1. Remove 2 screws (❶, ❷).
2. Remove the speaker wires and the speaker connector from the front cabinet.

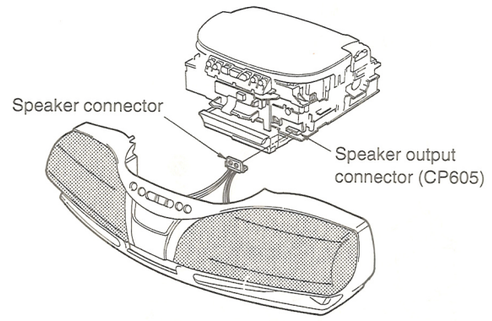

3. Connect the speaker connector to the speaker output connector (CP605).

●The following extension cable kit is necessary to check and adjust the unit's P.C.B.

●RFKZ0048 (A set of 2 extension cables)

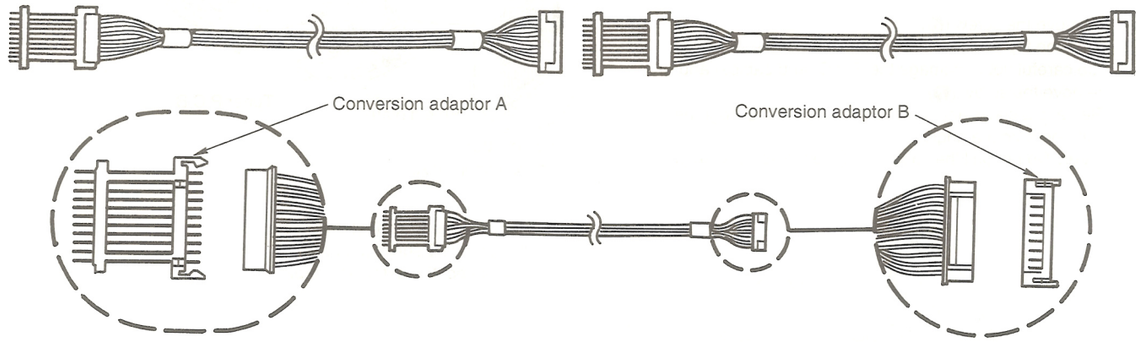

●Use the extension cable with the conversion adaptor A connected when checking and adjusting the mechanism control P.C.B.
Note: Use the extension cable without connecting the conversion adaptor A when checking and adjusting the tuner P.C.B.

●Use the extension cable with the conversion adaptor B connected when checking and adjusting the tuner P.C.B.
Note: Use the extension cable without connecting the conversion adaptor B when checking and adjusting the mechanism control P.C.B.

●When the conversion adaptor for the extension cable is lost, it can be supplied as a single part. (Only cables can not be supplied.)

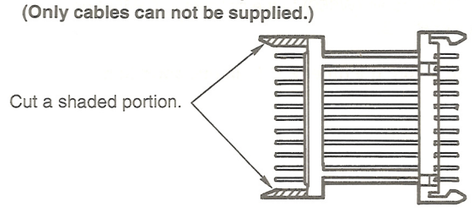

Conversion adaptor A: RJT071H11

Conversion adaptor B: RJP11G17ZA

●Check and Adjustment of the Tuner P.C.B.

1. Remove the main unit as explained on page 16 in the Disassembly Instructions. (Ref. No. 3 Removal of the Main Unit.)

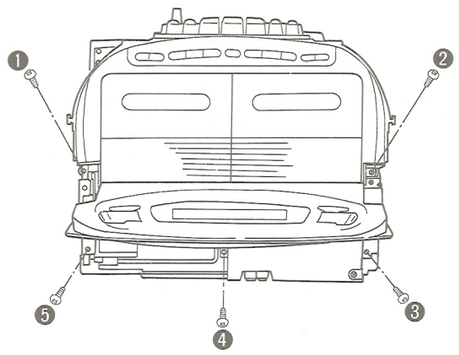

2. Remove 5 screws (❶~❺).

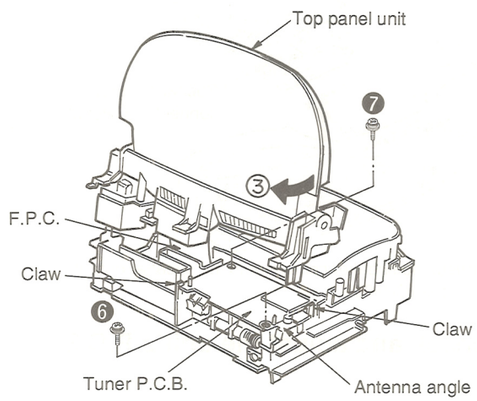

4. Remove the screw (❻).
5. Turn the top panel unit in the direction of the arrow ③ (be careful not to damage the F.P.C. and cables) and remove the screw (❼).
6. Release 2 claws and remove the tuner P.C.B. together with the antenna angle.
   Note: Do not pull the cables and the F.P.C. to excess.

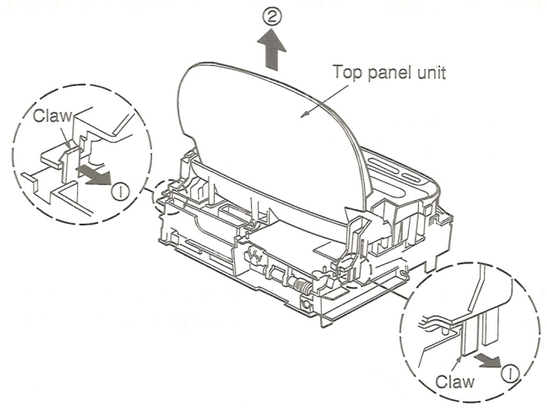

3. Release 2 claws in the direction of the arrows ① and lift up the top panel unit in the direction of the arrow ②. (The unit can be lifted up just slightly as allowed by the length of the cables.)

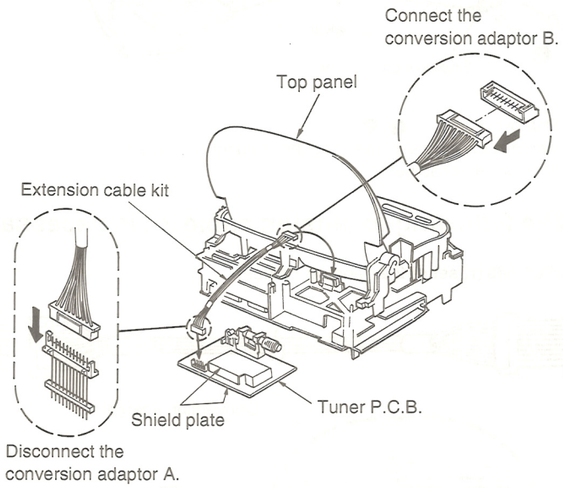

7. Install the top panel unit again.
8. Remove 2 shield plates.
9. Connect the extension cable kit.

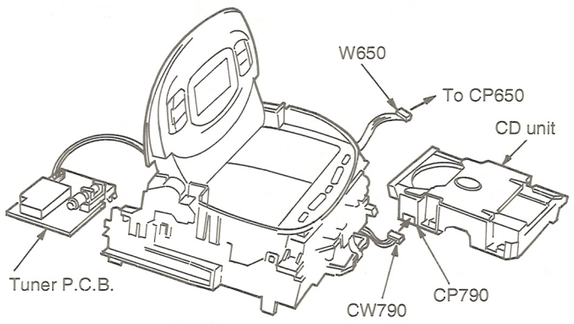

10. Connect the cable (CW790) to the connector (CP790) on the CD unit.
    (If the connector CP790 on the CD unit is not connected, this unit may not operate normally.)
11. Connect the cable (W650) to the connector (CP650) on the power P.C.B.

●Check and adjust the tuner P.C.B. in this condition.

●Check and Adjustment of the Mechanism Control P.C.B.

1. Remove the mechanism unit as explained on page 19 in the Disassembly Instructions. (Ref. No. 12 Removal of the Mechanism Unit.)

2. Connect the extension cable kit.
3. Connect the cable (CW790) to the connector (CP790).
   (If the connector CP790 on the CD unit is not connected, this unit may not operate normally.)
4. Connect the cable (W650) to the connector (CP650) on the power P.C.B.

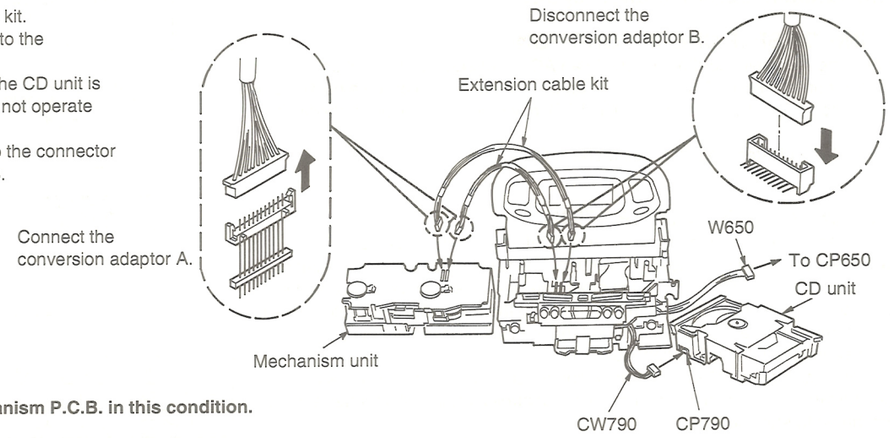

●Check and adjust the mechanism P.C.B. in this condition.

●Check and Adjustment of the CD P.C.B.

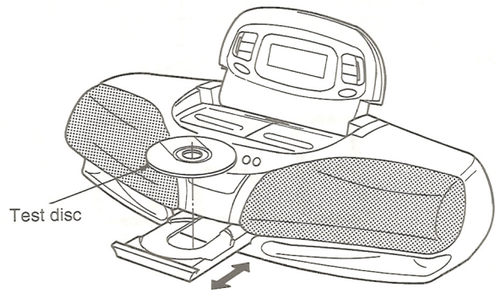

1. Turn the power on and load the test disc into this unit.
2. Remove the CD unit as explained on page 13 in the Disassembly Instructions. (Ref. No. 4 Removal of the CD Unit.)

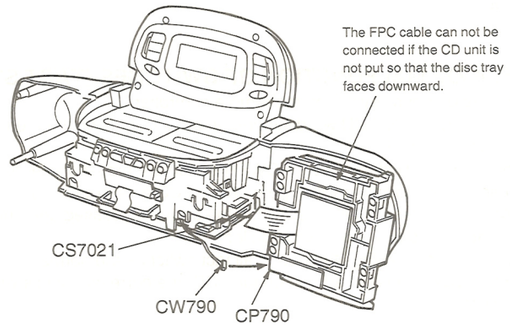

3. Connect the cable (CW790) to the connector (CP790) on the CD unit.
4. Connect the FPC cable from the CD unit to the connector (CS7021) on the main P.C.B.
   (Note that the extension cable kit RFKZ0009 can not be used.)

●Check and adjust the CD P.C.B. in this condition.

●Check of the Main P.C.B.

1. Remove the main unit as explained on page 16 in the Disassembly Instructions. (Ref. No. 3 Removal of the Main Unit.)

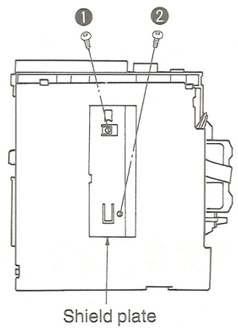

2. Remove 2 screws (❶, ❷) and the shield plate.

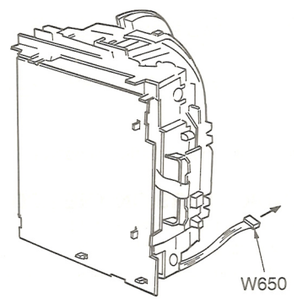

3. Connect the cable (W650) to the connector (CP650).

●Check the main P.C.B. in this condition.

●Check of the Top Panel Open/Close P.C.B.

1. Remove the mechanism unit as explained on page 19 in the Disassembly Instructions. (Ref. No. 12 Removal of the Mechanism Unit.)

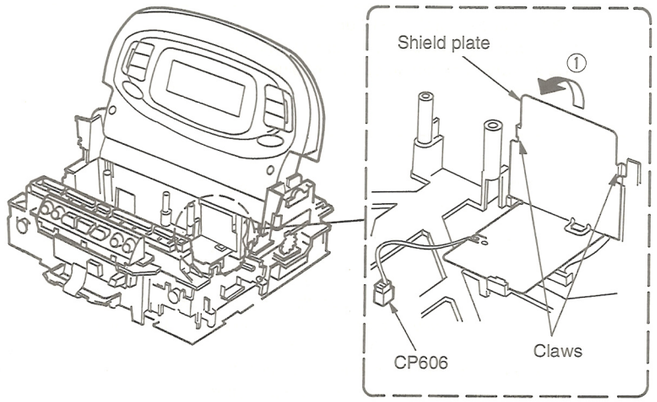

2. Disconnect the connector (CP606).
3. Remove the shield plate in the direction of the arrow ①.

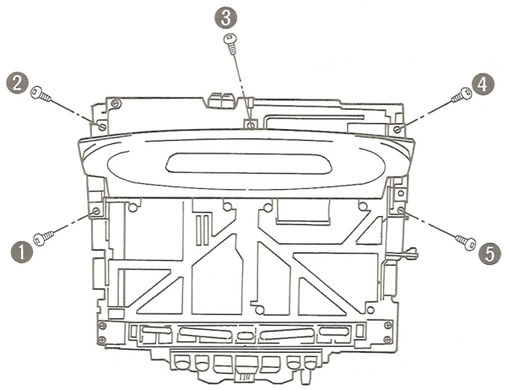

4. Remove 5 screws (❶~❺).

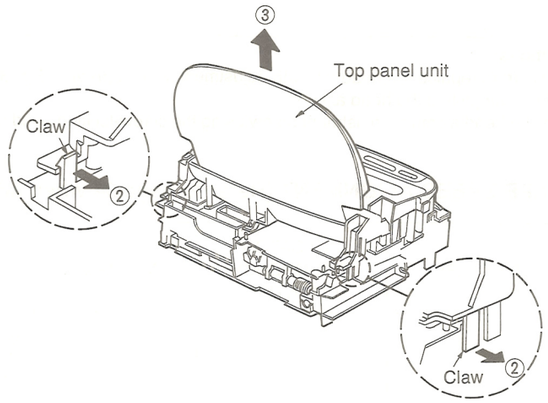

5. Release 2 claws in the direction of the arrows ②.
6. Lift up the top panel unit in the direction of the arrow ③.

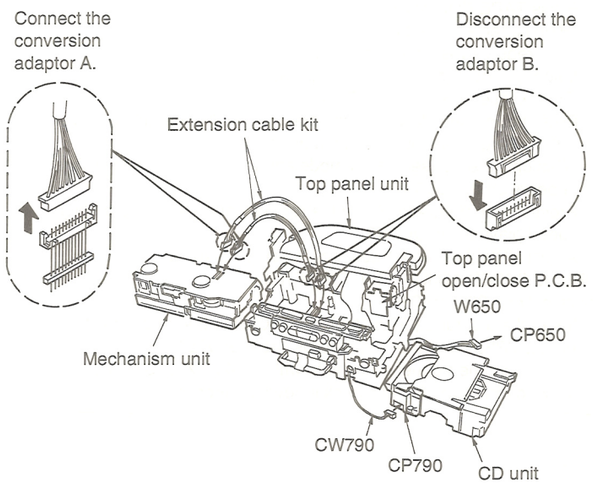

7. Put the top panel unit as shown in the left figure.
8. Connect the mechanism unit using the extension cable kit.
9. Connect the cable (CW790) to the connector (CP790) on the CD unit.
10. Connect the cable (W650) to the connector (CP650) on the power P.C.B.
11. Stand the mechanism unit.

●Check the top panel open/close P.C.B. in this condition.

●Check of the LCD P.C.B.

1. Remove the main unit as explained on page 16 in the Disassembly Instructions. (Ref. No. 3 Removal of the Main Unit.)

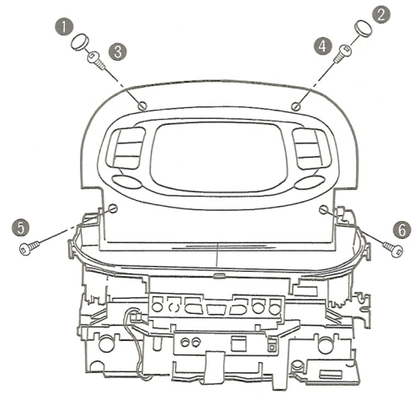

2. Remove 2 rubber caps (❶, ❷).
3. Remove 4 screws (❸~❻).

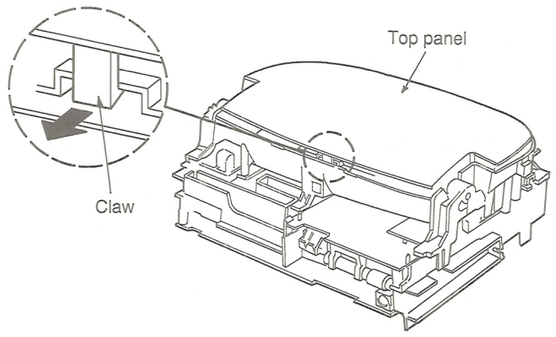

4. Shut the top panel and release the claw.

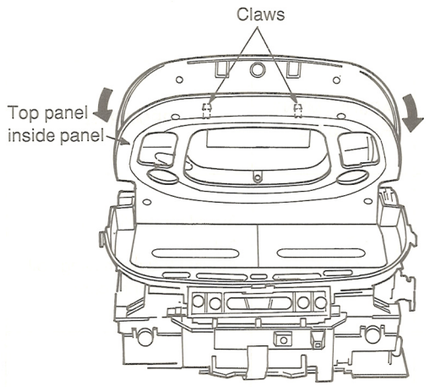

5. With the top panel half opened, release 2 claws inside the top panel.
6. Remove the top panel inside panel.

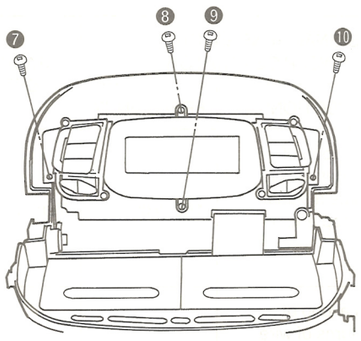

7. Remove 4 screws (❼~❿).

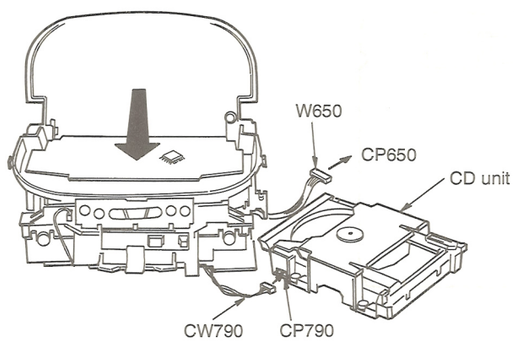

8. Connect the cable (CW790) to the connector (CP790) on the CD unit.
9. Connect the cable (W650) to the connector (CP650) on the power P.C.B.

●Check the LCD P.C.B. in this condition.

■ Measurements and Adjustments

<TUNER SECTION>

●ALIGNMENT INSTRUCTIONS

READ CAREFULLY BEFORE ATTEMPTING ALIGNMENT	
●Set power source voltage to 15 V DC. ●Set function to TUNER/MW or LW.	●Set volume level to −12 dB. ●Output of signal generator should be no higher than necessary to obtain an output reading.

●MW-RF ALIGNMENT (The parts other than the ones listed below are aligned at the factory before they are supplied. Therefore, alignment of those parts is unnecessary when used for replacement.)

SIGNAL GENERATOR or SWEEP GENERATOR		RADIO DIAL SETTING	INDICATOR (ELECTRONIC VOLTMETER or OSCILLOSCOPE)	ADJUSTMENT (Refer to Fig. 1.)	REMARKS
CONNECTIONS	FREQUENCY				
Fashion a loop of several turns of wire and radiate a signal into the loop ant. of receiver.	594 kHz	Tune to signal	Headphones Jack (32Ω) (Fabricate the plug as shown in Page 86 and then connect the lead wires of the plug to the measuring instrument.)	(*1) L2-1 (MW ANT Coil)	Adjust for maximum output. Adjust L2-1 by moving coil along the ferrite core.
〃	1503 kHz	〃	〃	CT1 (MW ANT Trimmer)	Adjust for maximum output.
(*1) Fix antenna coil with wax after completing alignment.					

●LW-RF ALIGNMENT

SIGNAL GENERATOR or SWEEP GENERATOR		RADIO DIAL SETTING	INDICATOR (ELECTRONIC VOLTMETER or OSCILLOSCOPE)	ADJUSTMENT (Refer to Fig. 1.)	REMARKS
CONNECTIONS	FREQUENCY				
Fashion a loop of several turns of wire and radiate a signal into the loop ant. of receiver.	153 kHz	Tune to signal	Headphones Jack (32Ω) (Fabricate the plug as shown in page 86 and then connect the lead wires of the plug to the measuring instrument.)	(*2) L2-2 (LW ANT Coil)	Adjust for maximum output. Adjust L2-2 by moving coil along the ferrite core.
Fashion a loop of several turns of wire and radiate a signal into the loop ant. of receiver.	270 kHz	Tune to signal	Headphones Jack (32Ω) (Fabricate the plug as shown in page 86 and then connect the lead wires of the plug to the measuring instrument.)	CT2 (LW ANT Trimmer)	Adjust for maximum output.
(*2) Fix antenna coil with wax after completing alignment.					

●ALIGNMENT POINT

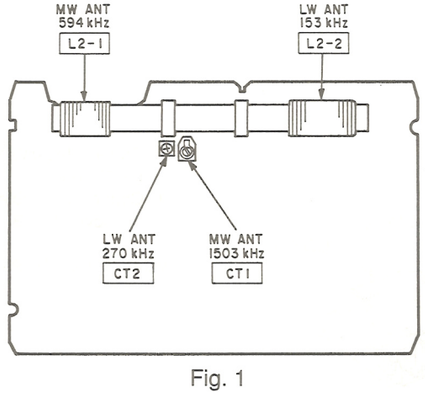

Fig. 1

<CASSETTE DECK SECTION>

●ALIGNMENT INSTRUCTION

READ CAREFULLY BEFORE ATTEMPTING ALIGNMENT	
●Set power source voltage to 15 V DC. ●Set function to TAPE.	●Set volume control to −12 dB. ●Output of signal generator should be no higher than necessary to obtain an output reading.

●HEAD AZIMUTH ALIGNMENT

TEST TAPE	INDICATOR (ELECTRONIC VOLTMETER or OSCILLOSCOPE)	ADJUSTMENT	SPECIFICATION	REMARKS
QZZCFM (8 kHz, −20 dB)	Headphones Jack (32Ω) (Fabricate the plug shown in Page 86 and then connect the lead wires of the plug to the measuring instrument.)	Azimuth Screw (Refer to Fig. 2.)	Maximum output	1. Insert the test tape (QZZCFM) and start playback in the forward direction on DECK1. 2. Adjust the azimuth screw for maximum waveform on the oscilloscope and the similar output on L and R channels. 3. When adjusting the azimuth in the reverse direction, repeat the adjustment a several times because of a little slip on the forward direction side. 4. Adjust the azimuth on the DECK2 as well as the DECK1.

Cautions:
- ●Be sure to repalce the head azimuth adjustment screws (refer to Fig. 3) and remove the screw-locking bond left on the head base when readjusting the head azimuth.
- ●Fix the head azimuth adjustment screw using the screw-locking bond after adjusting the head azimuth.

●TAPE SPEED ALIGNMENT (Refer to page 94 when adjusting only tape speed.)

TEST TAPE	INDICATOR (FREQUENCY COUNTER)	ADJUSTMENT	REMARKS
QZZCWAT (3 kHz, −10 dB)	Headphones jack (32Ω) (Fabricate the plug shown in page 86 and then connect the lead wires of the plug to the measuring instrument.)	DECK2 HIGH SPEED …VR302 DECK1 NORMAL SPEED …VR303 DECK2 NORMAL SPEED …VR301 (Refer to Fig. 4.)	NORMAL SPEED ADJUSTMENT (DECK1) (Specification: 3000±40 Hz) 1. Insert a test tape (QZZCWAT) in DECK1 and start playback in forward direction. 2. Adjust VR303 until the frequency is set to 3000±20 Hz on the frequency counter. 3. Check that the frequency is set to within ±40 Hz for playback in forward direction after playback in reverse direction. HIGH SPEED ADJUSTMENT (DECK2) (Specification: F±100 Hz) 4. Insert the test tape (QZZCWAT) in DECK1. 5. Insert the tape with erase-prevention tabs in DECK2. 6. Press TAPE EDIT switch twice. (High speed edit starts.) 7. This frequency is defined as "F". 8. Insert the test tape (QZZCWAT) in DECK2. (Do not insert test tape in DECK1.) 9. Press the numeric keys "4" and then "7" on the remote controller with holding tape stop (□) button on the unit. (This unit is set to self check mode and the display shown in Fig. 5 appears on the LCD.) 10. Press the numeric key "9" on the remote controller and start high speed playback in DECK2. 11. Adjust VR302 until the frequency is set to F±40 Hz. NORMAL SPEED ADJUSTMENT (DECK2) (Specification: 3000±40 Hz) 12. Insert the test tape (QZZCWAT) in DECK2 and start playback. 13. Adjust VR301 until the frequency is set to 3000±20 Hz. 14. Check that the frequency is set to within ±40 Hz for playback in forward direction after playback in reverse direciton.

●RECORD BIAS VOLTAGE CHECK

TEST TAPE	INDICATOR (ELECTRONIC VOLTMETER or OSCILLOSCOPE)	ADJUSTMENT	SPECIFICATION	REMARKS
Use METAL tape, CrO_2 tape and Normal tape.	TP3 ...(+) TP4 ...(−) (Refer to Fig 6.)	——	Normal ...16.0~19.0 mV CrO_2 ...22.5~26.5 mV METAL ...32.0~37.0 mV	Insert the tape with erase-prevention tabs in DECK2 and start recording.

●PLAYBACK LEVEL ADJUSTMENT

TEST TAPE	INDICATOR (FREQUENCY COUNTER)	ADJUSTMENT	SPECIFICATION	REMARKS
QZZCFM (315 Hz, 0 dB)	TP5 ...Lch (+) TP6 ...(−) TP7 ...Rch (+) (Refer to Fig. 7.)	DECK1 Lch...VR101 Rch...VR201 DECK2 Lch...VR102 Rch...VR202 (Refer to Fig. 4.)	−11 dBV (280 mV) ±1 dBV	1. Insert a test tape (QZZCFM) and start playback. 2. Adjust VR until the electronic voltmeter reaches the value of −11 dBV (280 mV)±1 dBV.

●LOCATIONS OF ADJUSTMENTS

(With regard to the test points refer to the schematic diagrams and printed circuit board diagrams.)

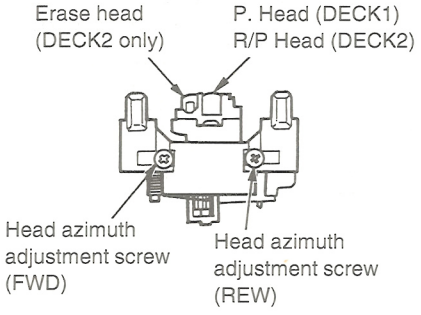

Fig. 2

Fig. 3

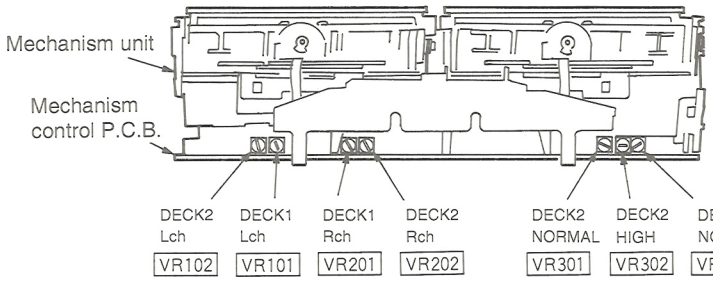

Fig. 4

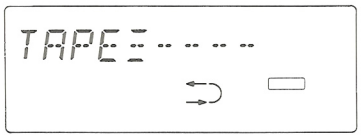

Fig. 5

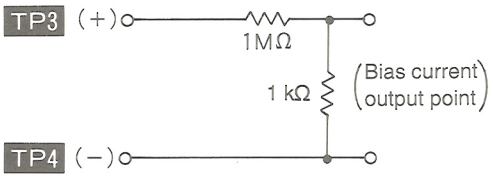

Fig. 6

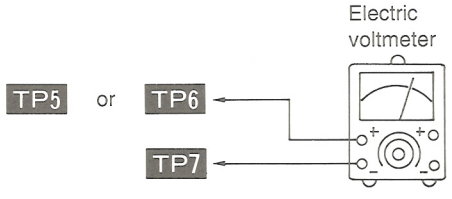

Fig. 7

●WHEN ADJUSTING ONLY HEAD AZIMUTH

●Adjustment can be performed without disassembly when adjusting only the head azimuth.

Note: ●Be sure to replace the head azimuth adjustment screws (refer to Fig. 3) and remove the screw-locking bond left on the head base when readjusting the head azimuth. Otherwise, a fine adjustment is not possible.

●Fix the head azimuth adjustment screws using the screw-locking bond after adjusting the head azimuth.

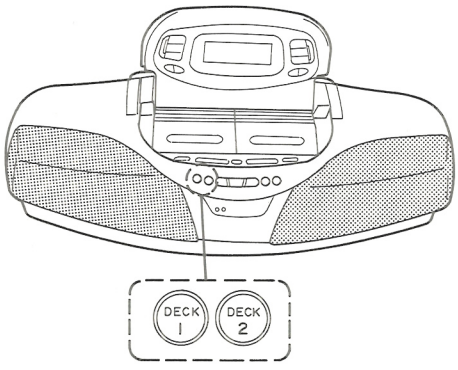

1. Connect the AC power cord of this unit to an AC outlet and turn the unit on. Press the cassette deck open button for on the deck whose head azimuth is to be adjusted and open the cassette cover.

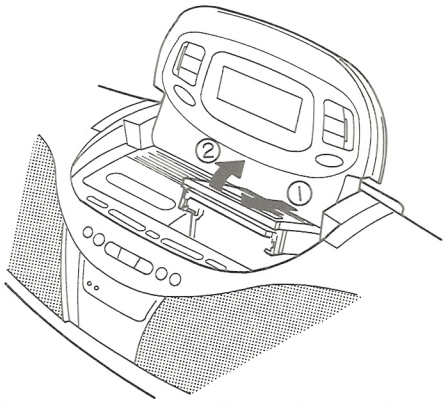

2. Slide the cassette cover panel in the direction of the arrow ① and remove it in the direction of the arrow ②. (Though the figure below shows only DECK2, DECK1 is also removed in the same procedure.)

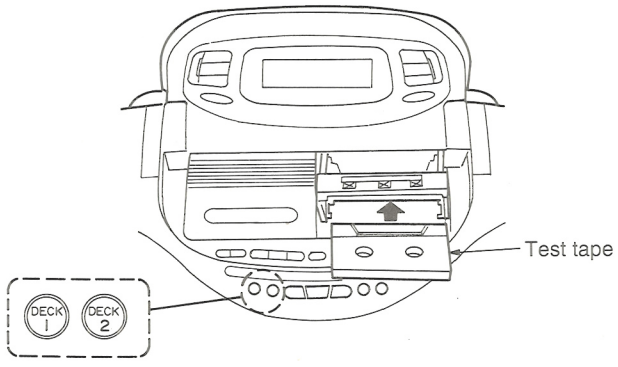

3. Insert a test tape (QZZCWAT) in DECK2 (or DECK1) and press DECK2 (or DECK1) button. And then shut the cassette cover.

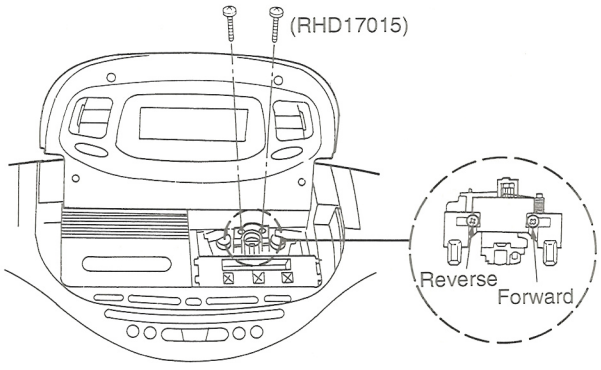

4. Remove 2 head azimuth adjustment screws.
5. Remove screw-locking bond left on the head base.
6. After installing new screws (RHD17015), play back the test tape and adjust the head azimuth.
7. After adjustment, fix the screws with screw-locking bond.

●WHEN ADJUSTING ONLY TAPE SPEED

1. Remove the main unit as explained on page 12 in the Disassembly Instructions. (Ref. No. 3 Removal of the Main Unit.)

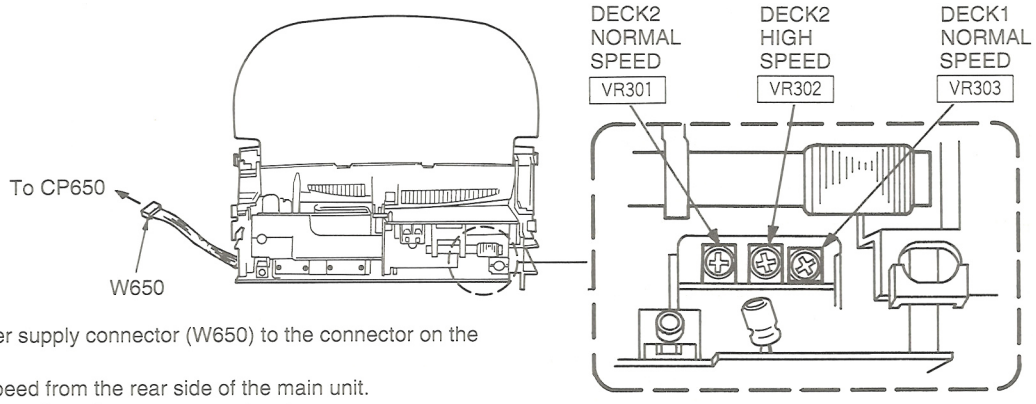

2. Connect power supply connector (W650) to the connector on the power P.C.B.
3. Adjust tape speed from the rear side of the main unit. (Refer to page 88 for adjustment procedure.)

<CD SECTION>

Caution:
It is very dangerous to look at or touch the laser beam. (Laser radiation is invisible.)
With the unit turned "on", laser radiation is emitted from the pickup lens.
Avoid exposure to the laser beam, especially when performing adjustments.

●Preparation for Adjustment

1. Set up the unit following the procedure described in "Check and Adjustment for the CD P.C.B.". (See page 84.)
2. After completing the setup procedure, switch the unit off then switch it on again (to adjust the unit with the CD unit placed in an upright position).

Measuring Instruments and Special Tools

- Test disc
  1. Playability test disc (SZZP1054C)
  2. Uneven test disc (SZZP1056C)
- Hexagonal wrench (M2.0) (SZZP1101C)
- Oscilloscope

(1) MECHANICAL ADJUSTMENT

- When the traverse deck is replaced, making adjustments is not necessary. (The traverse deck ass'y is already adjusted.)
- Make adjustments to improve playability when the traverse deck has not been replaced. Make the electrical adjustments first.

1. Connect the oscilloscope's CH. 1 probe across **TJ701** (+) and **TJ702** (VREF) on the Servo P.C.B.
   Oscilloscope setting:
   VOLT ..... 200 mV
   SWEEP ..... 0.5 µsec
   Input coupling ..... AC
2. Switch the player power **ON**, and play track **19** on the test disc (SZZP1056C).
3. Leave the player in Play mode and place it as shown in the figure on the right.
4. Alternately adjust the two mechanical adjusting screws with the 2.0 mm allen wrench (SZZP1101C) until the RF signal amplitude on the oscilloscope is maximize. (Shown in Fig. 8)
5. After completing the adjustment, lock the **mechanical adjustments** with lock paint (RZZ0L01).

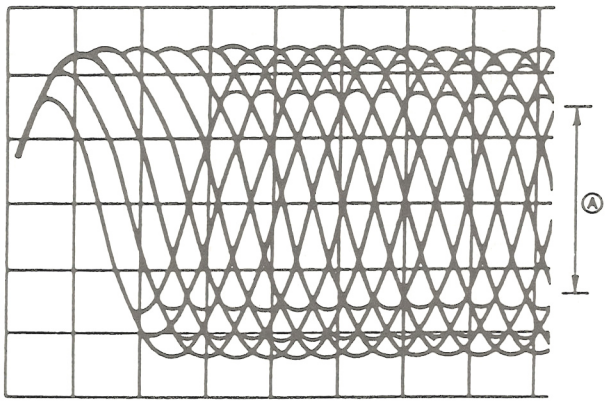

Ⓐ **Maximize the amplitude.**

●NEW DIGITAL SERVO CIRCUIT

A digital servo circuit employed in this unit is a new type circuit. All adjustment VRs, which are equipped with conventional digital servo circuits, are removed from the electric section. Therefore, only mechanical adjustments are necessary.

(2) CHECK OF PLAY OPERATION AFTER ADJUSTMENT

●Checking Skip Search

1. Play an ordinary musical program disc.
2. Press the skip button to check for normal skip search operation (in both the forward and reverse directions).

●Checking Manual Search

1. Play an ordinary musical program disc.
2. Press the manual search button to check for smooth manual search operations at either low or high speed (in both the forward and reverse directions).

●Checking playability

1. Play the 0.7 mm black dot and the 0.7 mm wedge on the test disc (SZZP1054C) and verify that no sound skip or noise occurs.
2. Play the middle tracks of the uneven test disc and verify that no sound skip or noise occurs.

●Locations of Adjustments

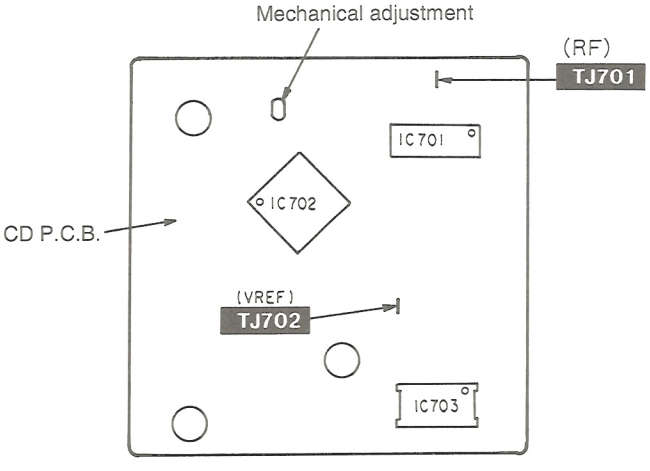

Fig. 8

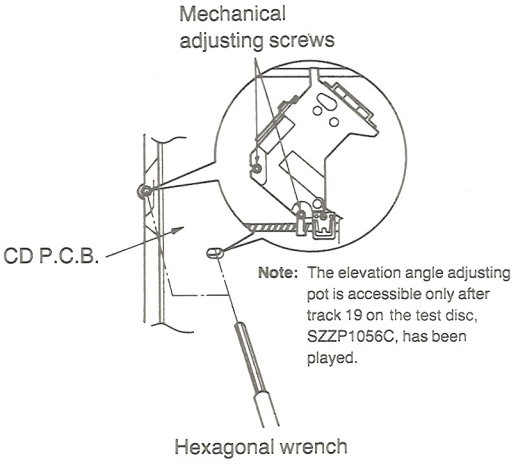

Fig. 9

■ Function of IC Terminals

●IC701 (AN8802SCE1V)

Pin No.	Terminal Name	I/O	Function
1	PDAD	I	PD A channel signal input with delay
2	PDA	I	PD A channel signal input without delay
3	LPD	I	Laser PD connection
4	LD	O	Power supply for LD driving
5	AMPI	I	RF amplifier input
6	Vcc	I	Power supply connection
7	AMPO	O	RF amplifier output (no use, open)
8	CAGC	I	AGC loop filter connection
9	ARF	O	RF AGC output
10	CENV	I	Capacitor connection for RF detection
11	CEA	I	Capacitor connection for HPF amplifier
12	GND	—	Ground connection
13	LDON	I	ON/OFF input of LD APC ("H": ON, "L": OFF)
14	TES	I	Tracking error shunt signal input ("H": shunt)
15	PLAY	I	Play signal input ("H": PLAY)
16	WVEL	I	WVEL control
17	BDO	O	BDO output
18	/RFDET	O	NRFDET output
19	CROSS	O	CROSS output
20	OFTR	O	OFTR output
21	VDET	O	VDET output
22	ENV	O	ENV output
23	TEBPF	I	Vibration detection input
24	TE	O	Tracking error output
25	FE	O	Focus error output
26	PTO	O	Potentioamplifier output (no use, open)
27	PTI	I	Potentioamplifier inversion input (no use, open)
28	TBAL	I	Tracking balance input
29	FBAL	I	Focus balance input
30	VREF	O	VREF output
31	PDB	I	PD B channel signal input without delay
32	PDBD	I	PD B channel signal input with delay

●IC702 (MN66271RA)

Pin No.	Terminal Name	I/O	Function
1	BCLK	O	Bit clock output for serial data (no used, open)
2	LRCK	O	L/R identification signal output (no use, open)
3	SRDATA	O	Serial data output (no used, open)
4	$DV_{DD}1$	I	Power supply input (for digital circuit)
5	$DV_{SS}1$	—	GND (for digital circuit)
6	TX	O	Digital audio interface signal output
7	MCLK	I	Microprocessor command clock signal input (Latches data at first transition)
8	MDATA	I	Microprocessor command data signal input
9	MLD	I	Microprocessor command load signal input
10	SENSE	O	Sence signal output (OFT, FESL, MAGEND, NAJEND, POSAD, SFG)
11	/FLOCK	O	Focus servo feeding signal output ("L": Feed)
12	/TLOCK	O	Tracking servo feeding signal output ("L": Feed)
13	BLKCK	O	Sub-code block clock signal output (fBLKCK=75 Hz during normal playback)
14	SQCK	I	External clock signal input for sub-code Q register
15	SUBQ	O	Sub-code Q code output
16	DMUTE	I	Muting input ("H": Mute)
17	STAT	O	Status signal output (CRC, CUE, CLVS, TTSTVP, FCLV, SQCK)
18	/RST	I	Reset input
19	SMCK	O	1/2-divided clock signal of crystal oscillating at MSEL="H" (fSMCK=8.4672 MHz) 1/4-divided clock signal of crystal oscillating at MSEL="L" (fSMCK=4.2336 MHz)
20	PMCK	O	1/192-divided clock signal of crystal oscillating (fPMCK=88.2 KHz) (no use, open)
21	TRV	O	Traverse forced feed output
22	TVD	O	Traverse drive output
23	PC	O	Spindle motor ON signal output ("L": ON)
24	ECM	O	Spindle motor drive signal output (forced mode output)
25	ECS	O	Spindle motor drive signal output (servo error signal output)
26	KICK	O	Kick pulse output
27	TRD	O	Tracking drive output
28	FOD	O	Focus drive output

Pin No.	Terminal Name	I/O	Function
29	VREF	I	D/A (drive) output (TVD, ECS, TRD, FOD, FBAL, TBAL) Reference voltage input
30	FBAL	I	Focus balance adjustment output
31	TBAL	O	Tracking balance adjustment output
32	FE	I	Focus error signal input (analog input)
33	TE	I	Tracking error signal input (analog input)
34	RFENV	I	RF envelope signal input
35	VDET	I	Vibration detection signal input ("H": detection)
36	OFT	I	Off-track signal input ("H": off track)
37	TRCRS	I	Track cross signal input
38	/RFDET	I	RF detection signal input ("L": detection)
39	BDO	I	Dropout signal input ("H": Dropout)
40	LDON	O	Laser on signal output ("H": ON)
41	TES	O	Tracking error shunt signal output ("H": shunt)
42	PLAY	O	Play signal out ("H": PLAY)
43	WVEL	O	Double speed status signal output ("H": Double speed)
44	ARF	I	RF signal input
45	IREF	I	Reference current input
46	DRF	—	DSL bias (no use, open)
47	DSLF	I/O	DSL loop filter
48	PLLF	I/O	PLL loop filter
49	VCOF	—	VCO loop filter (no use, open)
50	AVDD2	I	Power supply input (for analog circuit)
51	AVSS2	—	GND (for analog circuit)
52	EFM	—	EFM signal output (not use, open)
53	PCK	—	PLL extraction clock output (fPCK=4.321 MHz during normal playback) (no use, open)
54	PDO	—	Phase comparison signal of EFM and PCK signals (no use, open)
55	SUBC	—	Sub-code serial data output (no use, open)
56	SBCK	I	Clock input for sub-code serial data (no use, GND)
57	Vss	—	GND
58	X1	I	Crystal oscillating circuit input (f=16.9344 MHz)
59	X2	O	Crystal oscillation circuit output (f=16.9344 MHz)
60	VDD	I	Power supply input (for oscillating circuit)
61	BYTCK	—	Byte clock output (no use, open)
62	/CLDCK	—	Sub-code frame clock signal output (fCLDCK=7.35 kHz during normal playback) (no use, open)
63	FCLK	—	Crystal frame clock signal output (fFCLK=7.35 kHz, double=14.7 kHz)
64	PFLAG	—	Interpolation flag output ("H": Interpolation) (no use, open)
65	FLAG	—	Flage output (no use, open)
66	CLVS	—	Spindle servo phase synchronizing signal output ("H": CLV, "L": rough servo) (no use, open)
67	CRC	—	Sub-code CRC checked output ("H": OK, "L": NG) (no use, open)
68	DEMPH	—	De-emphasis ON signal output ("H": ON) (no use, open)
69	RESY	—	Frame resynchronizing signal output (no use, open)
70	/RST2	I	Reset input through MASH circuit ("L": Reset)
71	/TEST	I	Test input
72	AVDD1	I	Power supply input (for analog circuit)
73	OUTL	O	Left channel audio signal output
74	AVSS1	—	GND
75	OUTR	O	Right channel audio signal output
76	RSEL	I	RF signal polarity assignment input (at "H" level, RSEL="H"; at "L" level, RSEL=L)
77	CSEL	I	Crystal oscillating frequency designation input ("L": 16.9344 MHz, "H": 33/8688 MHz)
78	PSEL	—	Test input (normally, "L") (no use, GND)
79	MSEL	—	Output frequency switching for SMCK terminal "H": SMCK=8.4672 MHz "L": SMCK=4.2336 MHz (no use, GND)
80	SSEL	I	Output mode switching of SUBQ terminal ("H": Q code buffer mode)

●IC703 (AN8389SE1)

Pin No.	Terminal Name	I/O	Function
1	Vcc	I	Power supply
2	VREF	I	VREF input
3	IN4	I	Motor driver (4) input
4	IN3	I	Motor driver (3) input
5	GND	—	Ground connection
6	NC	—	No connection
7	NRESET	I	Reset input
8	GND	—	Ground connection
9	IN2	I	Motor driver (2) input
10	PC2	I	PC2 (power cut) input
11	IN1	I	Motor driver (1) input
12	PC1	I	PC1 (power cut) input (no use, GND)
13	PVCC1	I	Power supply (1) for driver
14	PGND1	—	Ground connection (1) for driver
15	D1−	O	Motor driver (1) reverse-action output
16	D1+	O	Motor driver (1) forward-action output
17	D2−	O	Motor driver (2) reverse-action output
18	D2+	O	Motor driver (2) forward-action output
19	D3−	O	Motor driver (3) reverse-action output
20	D3+	O	Motor driver (3) forward-action output
21	D4−	O	Motor driver (4) reverse-action output
22	D4+	O	Motor driver (4) forward-action output
23	PGND2	—	Ground connection (2) for driver
24	PVCC2	I	Power supply (2) for driver

●IC2 (XLU2616F-E1)

Pin No.	Terminal Name	I/O	Function
1	X OUT	O	Connect to ceramic oscillator
2	X IN	I	
3	CE	I	PLL tuner strobe signal input
4	DA	I	PLL tuner data input
5	CL	I	PLL tuner clock signal input
6	TUN	O	Tuner sending mode output
7	SD	I	Broadcast receiving signal input
8	IF IN	I	IF signal input
9	P3	O	Tuner mono/stereo switching signal output
10	P0	O	Power control signal output (for AM circuit)
11	P1	O	Power control signal output (for FM circuit)
12	P2	—	——
13	AM IN	I	AM OSC signal input
14	FM IN	I	FM OSC signal input
15	V_{DD}	I	Power supply input (+9 V)
16	PD1	O	Variable capacitor-diode control signal output
17	PD2	—	——
18	GND	—	GND

●IC801 (MND3210REAN)

Pin No.	Terminal Name	I/O	Function
1	V_{DD}	I	Power supply input (+5 V)
2	OSC2	O	Clock output (3.9 MHz)
3	OSC1	I	Clock input (3.9 MHz)
4	V_{SS}	—	GND
5	XI	I	Clock input (32.7 kHz)
6	XO	O	Clock output (32.7 kHz)
7	VREF–	—	AD converter reference voltage (GND)
8	AD IN7	I	Leaf switch signal input (DECK2)
9	AD IN6	I	Cassette cover close detection signal and reel pulse inputs (DECK2)
10	AD IN5	I	Cassette cover open detection signal and TPS signal inputs (DECK2)
11	AD IN4	I	Cassette cover open/close detection signal input (DECK1)
12	AD IN3	I	Top panel open/close detection signal input
13	AD IN2	I	AD converter signal input (operation switches on Top panel)
14	AD IN1	I	AD coverter signal input (operation switches inside top panel)
15	AD IN0	I	AD converter signal input (operation switches on front panel)
16	VREF+	—	AD converter reference voltage (GND)
17	BP2	O	Beat proof control signal output 2
18	BP1	O	Beat proof control signal output 1
19	BEEP	O	Beep signal output
20	MKLATCH	O	Deck control data latch signal output
21	MKDATA	O	Deck control data output
22	MKCLK	O	Deck control clock output
23	LED	O	Display signal output (Menu select LED)
24	ASP LATCH	O	Latch signal output (for ASP)
25	ASPCLK	O	Serial clock signal output (for ASP)
26	POWER CONT	O	Power supply circuit control (H: power on)
27	MUTE A	O	Muting control signal output
28	AGDATA	O	Audio signal control data output (for ASP-IC, sub micro-processor IC602)
29	SPCLK	—	Bit 1 for destination switch
30	RESETOUT	—	Bit 2 for destination switch

Pin No.	Terminal Name	I/O	Function
31	REMOCON IN	I	Remote control signal input
32	BLKCK	I	Sub code block clock input
33	STATUS	I	CD status signal input
34	CDRST	I	CD reset signal input
35	RST	I	System reset signal input
36	MLD/PLL CL	O	CD signal process strobe signal output/ PLL tuner clock signal output
37	MDATA/PLL CE	O	CD signal process data output/PLL tuner strobe signal output
38	MCLK/PLL DI	O	CD signal process clock signal output/ PLL tuner control data signal output
39	CLOCK	O	CD sub-code reading clock output
40	SUBQ	I	CD sub-code data input
41	——	—	——
42	FREQ	—	——
43	CM	I	1-chip microprocessor mode setting input (L: 1-chip)
44	TLOCK/TUNED	I	CD tracking clock signal input/tuner receiving signal input
45	FLOCK/STEREO	I	CD focus lock signal input/tuner stereo signal input
46	REST SW	I	CD traverse position detection switch signal input (H: most inside position)
47	CD OPEN SW	I	CD tray open detection switch signal input
48	CD CLOSE SW	I	CD tray close detection switch signal input
49	SENSE	I	CD sense signal input
50	REMOCON STBY	I	Remote control sensor power control (H: ON, 4 MHz)
51	POWER DETECT	I	Power detection signal input (L: ON)
52 ~ 93	SEG41 ~ SEG0	O	LCD segment signal output
94 ~ 97	COM3 ~ COM0	O	LCD common signal output
98 ~ 100	VLC3 ~ VLC1	I	LCD bias reference voltage input

■ Block Diagram ●CD circuit

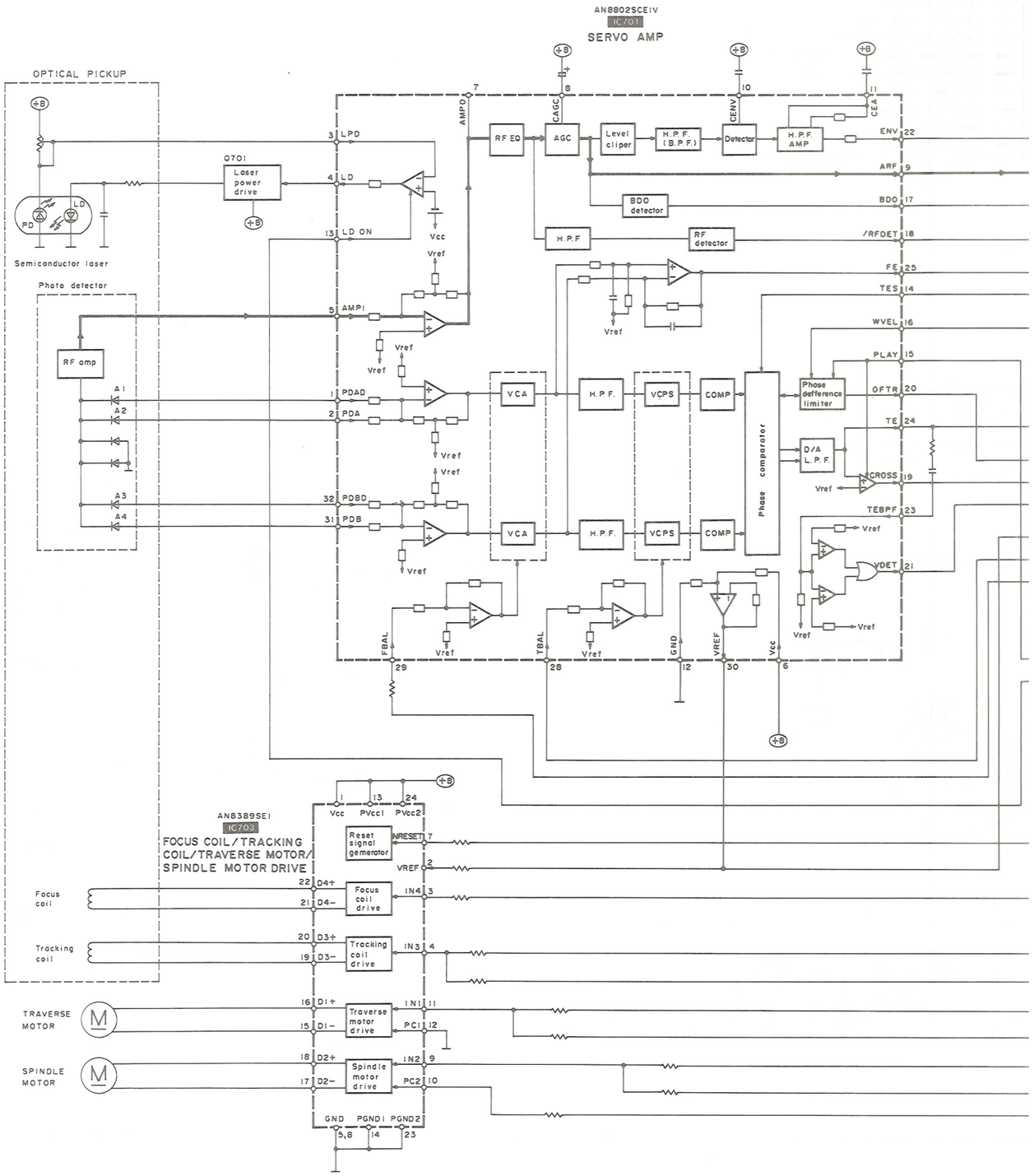

MN6627IRA
IC702

SERVO PROCESSOR/DIGITAL SIGNAL PROCESSOR/
DIGITAL FILTER/D/A CONVERTER

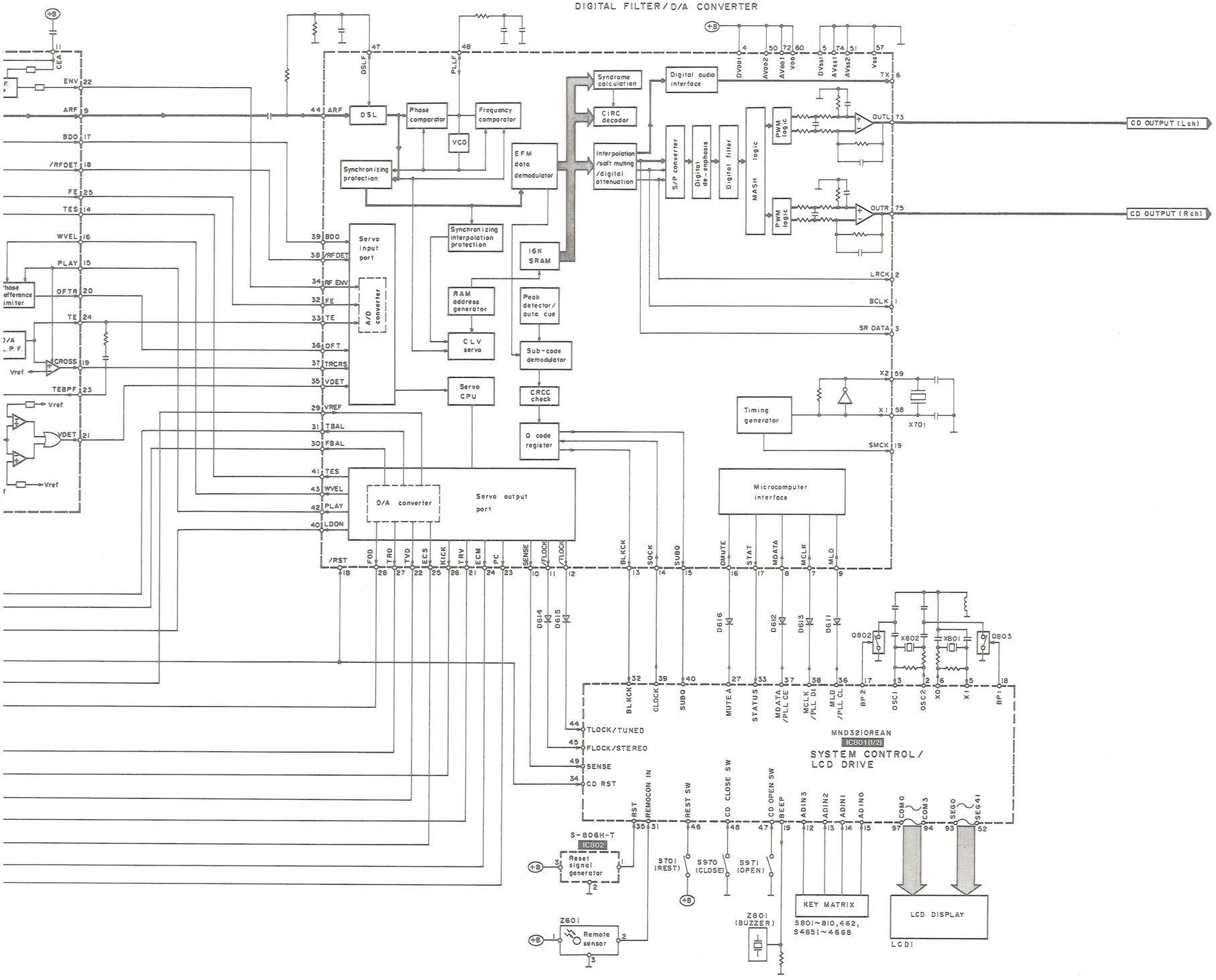

■ Block Diagram •Main circuit

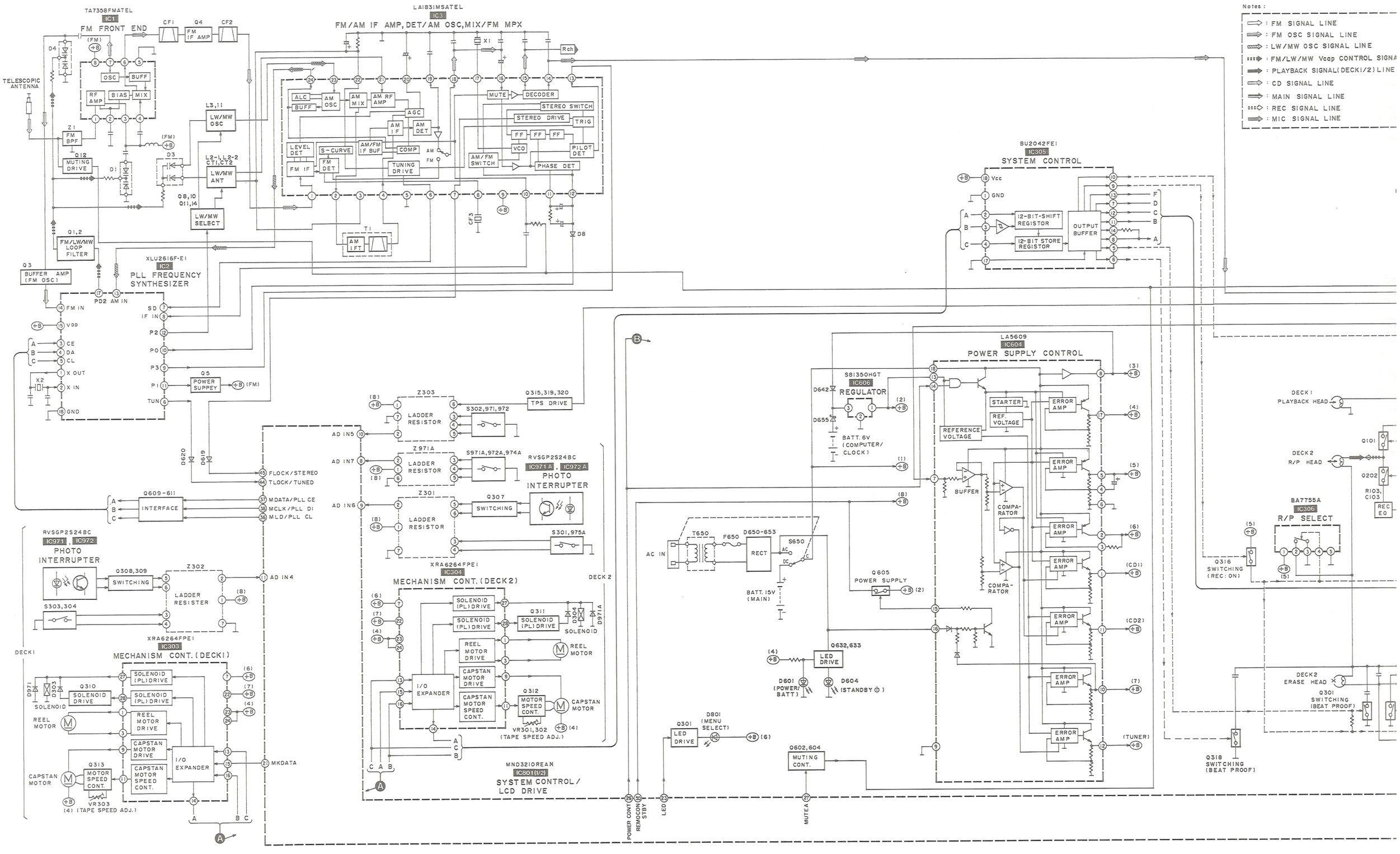

Notes :

- : FM SIGNAL LINE
- : FM OSC SIGNAL LINE
- : LW/MW OSC SIGNAL LINE
- : FM/LW/MW Vcap CONTROL SIGNAL LINE
- : PLAYBACK SIGNAL(DECK1/2) LINE
- : CD SIGNAL LINE
- : MAIN SIGNAL LINE
- : REC SIGNAL LINE
- : MIC SIGNAL LINE

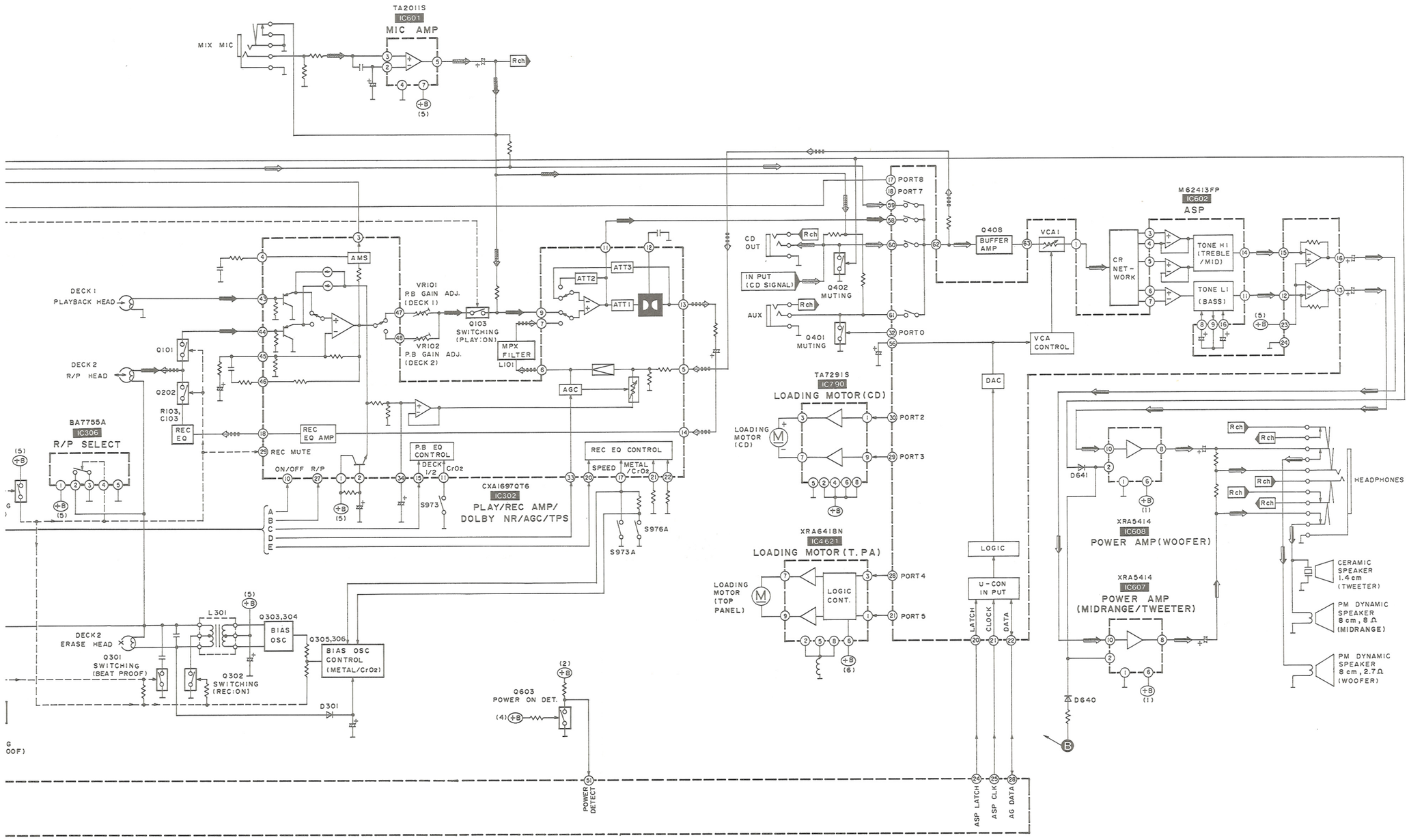

■ Replacement Parts List

Notes: *Important safety notice:
Components identified by ⚠ mark have special characteristics important for safety.
Furthermore, special parts which have purposes of fire-retardant (resistors), high-quality sound (capacitors), low-noise (resistors), etc. are used.
When replacing any of components, be sure to use only manufacturer's specified parts shown in the parts list.
*The parenthesized indications in the Remarks columns specify the areas. (Refer to the cover page for area.)
Parts without these indications can be used for all areas.
*Remote Control Ass'y: Supply period for three years from termination of production.
*Warning: This product uses a laser diode. Refer to caution statements on page 3.
*ACHTUNG: Die lasereinheit nicht zerlegen.
Die lasereinheit darf nur gegen einc vom hersteller spezifizierte einheit ausgetauscht werden.
*The "(SF)" mark denotes the standard part.

Ref. No.	Part No.	Part Name & Description	Remarks
		INTEGRATED CIRCUIT(S)	
IC1	TA7358FMATEL	FM FRONT END	
IC2	XLU2616F-E1	PLL FREQ. SYNTHE	
IC3	LA1831MSATEL	FM/AM IF AMP	
IC302	CXA1697QT6	DOLBY NR	
IC303, 304	XRA6264FPE1	MECHA CONT.	
IC305	BU2042FE1	SYSTEM CONT.	
IC306	BA7755A	R/P SELECT.	
IC601	TA2011S	MIC AMP	
IC602	M62413FP	ASP	
IC604 ⚠	LA5609	POWER SUPPLY CONT.	
IC606 ⚠	S81350HG	REGULATOR	
IC607, 608	XRA5414	POWER AMP	
IC701	AN8802SCE1V	SERVO AMP	
IC702	MN66271RA	SERVO PROCESSOR	
IC703	AN8389SE1	MOTOR DRIVE	
IC790	TA7291S	MOTOR DRIVE(CD)	
IC801	MND3210REAN	SYSTEM CONT.	
IC802	S-806H-T	RESET	
IC971	RVSGP2S24BC	PHOTO CUPLER	
IC971A	RVSGP2S24BC	PHOTO CUPLER	
IC972	RVSGP2S24BC	PHOTO CUPLER	
IC972A	RVSGP2S24BC	PHOTO CUPLER	
IC4621	XRA6418N	MOTOR DRIVE	
		TRANSISTOR(S)	
Q1, 2	2SC3311R	TRANSISTOR	
Q3	2SC2786LTA	TRANSISTOR	
Q4	2SC3313B	TRANSISTOR	
Q5	UN411FTA	TRANSISTOR	
Q8	2SC3311R	TRANSISTOR	
Q10	UN411FTA	TRANSISTOR	
Q11	2SD1450RTA	TRANSISTOR	
Q12	2SC3313B	TRANSISTOR	
Q14	2SC3311R	TRANSISTOR	
Q101	2SJ40CDTA	TRANSISTOR	
Q102	2SK664TX	TRANSISTOR	
Q103	2SJ40CDTA	TRANSISTOR	
Q201	2SJ40CDTA	TRANSISTOR	
Q202	2SK664TX	TRANSISTOR	
Q203	2SJ40CDTA	TRANSISTOR	
Q301	2SC2389SSTA	TRANSISTOR	
Q302	2SD2436STXRA	TRANSISTOR	

Ref. No.	Part No.	Part Name & Description	Remarks
Q303, 304	2SD1450RTA	TRANSISTOR	
Q305	XN1210TX	TRANSISTOR	
Q306	2SD1819RTX	TRANSISTOR	
Q307	XN1501TX	TRANSISTOR	
Q308, 309	2SD1819RTX	TRANSISTOR	
Q310	2SD1450RTA	TRANSISTOR	
Q311	2SD2436STXRA	TRANSISTOR	
Q312, 313	2SB1218RTX	TRANSISTOR	
Q315	2SD1819RTX	TRANSISTOR	
Q316	UN5114TX	TRANSISTOR	
Q318	2SC2389SSTA	TRANSISTOR	
Q319, 320	2SD1819RTX	TRANSISTOR	
Q401, 402	2SC3311AIRTA	TRANSISTOR	
Q408	2SC3312S	TRANSISTOR	
Q501, 502	2SC3311AIRTA	TRANSISTOR	
Q508	2SC3312S	TRANSISTOR	
Q602	UN4214TA	TRANSISTOR	
Q603	2SC3311AIRTA	TRANSISTOR	
Q604	UN411FTA	TRANSISTOR	
Q605	RVTDTA123JST	TRANSISTOR	
Q607	2SA1309AIRTA	TRANSISTOR	
Q609-611	RVTDTA143EST	TRANSISTOR	
Q621	2SC3311AIRTA	TRANSISTOR	
Q632	2SC3311AIRTA	TRANSISTOR	
Q633	UN4214TA	TRANSISTOR	
Q635	2SA1309AIRTA	TRANSISTOR	
Q701	2SB709S	TRANSISTOR	
Q801	DTC114EST	TRANSISTOR	
Q802, 803	2SC3311AIRTA	TRANSISTOR	
		DIODE(S)	
D1	KV1360NT	DIODE	
D2 ⚠	MA4082MTA	DIODE	
D3	KV1583BMTL	DIODE	
D4	KV1360NT	DIODE	
D8, 9	MA165	DIODE	
D10	MA165	DIODE	
D11	RVD1SS135TA	DIODE	
D301	MA165	DIODE	
D302	RVD1SR139TA	DIODE	
D303, 304	MA188TA	DIODE	
D305	MA165	DIODE	
D601	SLR-305MC	LED	
D603 ⚠	RVDMTZ8R2BTA	DIODE	
D604	SLR-305VC	LED	

Ref. No.	Part No.	Part Name & Description	Remarks
D608	MA165	DIODE	
D611-621	MA165	DIODE	
D640-642	MA165	DIODE	
D643 ⚠	RVDMTZ6R8BTA	DIODE	
D644 ⚠	MTZ10CTA	DIODE	
D645, 646	RVD1SR139TA	DIODE	
D650-653⚠	1N5402B-M21	DIODE	
D655	MA165QZ	DIODE	
D801	LN873RPX-TA3	DIODE	
D802	MA4051MTA	DIODE	
D803	MA165	DIODE	
D971	RVD1SS133TA	DIODE	
D971A	RVD1SS133TA	DIODE	
		VARIABLE RESISTOR(S)	
VR101	RRN6B05B14TA	V.R, PLAYBACK LEVEL	
VR102	RRN6B05B14TA	V.R, PLAYBACK LEVEL	
VR201	RRN6B05B14TA	V.R, PLAYBACK LEVEL	
VR202	RRN6B05B14TA	V.R, PLAYBACK LEVEL	
VR301	RRN6B05B24TA	V.R, TAPE SPEED·NORMAL	
VR302	RRN6B05B14TA	V.R, TAPE SPEED·HIGH	
VR303	RRN6B05B53TA	V.R, TAPE SPEED·NORMAL	
		COMPONENT COMBINATION(S)	
Z1	RXABPWB6A	COMPONENT COMBINATION	
Z301-303	EXBF7L355SYV	COMPONENT COMBINATION	
Z401	RAT0010	TWEETER	
Z501	RAT0010	TWEETER	
Z601	NJH32H367A	REMOTE SENSOR	
Z802	RAT0010	BUZZER	
Z971A	EXBF6L306SYV	COMPONENT COMBINATION	
		COIL(S)	
L2	RLV6C010-0	COIL	
L3	RLO2B011-T	COIL	
L5	RLQZP8R2JT-Y	COIL	
L8	ELEXT101KA9	COIL	
L9	ELEXT150KA9	COIL	
L11	RLO1B004-T	COIL	
L101	RLM2B005-1M	COIL	
L201	RLM2B005-1M	COIL	
L301	RLO8C006M-T	COIL	
L302	RLQZB470KT-D	COIL	
L308	ELJPA470KF	COIL	
L601	RLQZB8R2KT-D	COIL	
L602	RLL500050T-Y	COIL	
L603	RLQB221JTA-Y	COIL	
L604	RLQB101JTA-Y	COIL	
L605	RLQB221JTA-Y	COIL	

Ref. No.	Part No.	Part Name & Description	Remarks
L607, 608	ELEXT2R2KA9	COIL	
L650, 651⚠	RLL500050T-Y	COIL	
L804	ELEXT470KA9	COIL	
L4621, 4622	RLQZV101KT-D	COIL	
L5001-5009	RLL500050T-Y	COIL	
		TRANSFORMER(S)	
T1	RL12Z014-T	TRANSFORMER	
T650 ⚠	RTP1L1B005	POWER TRANSFORMER	
		FILTER(S)	
CF1, 2	RLFFETMLA02D	CERAMIC FILTER	
CF3	RLFDFTD05M	CERAMIC FILTER	
		OSCILLATOR(S)	
X1	RSXZ456KM01	OSCILLATOR(456KHz)	
X2	RSXC7M20S04T	OSCILLATOR(7.2MHz)	
X701	RSXZ16M9M02T	OSCILLATOR(16.9344MHz)	
X801	RSXD32K7S03	OSCILLATOR(32.7KHz)	
X802	RVBCSA3R9MGT	OSCILLATOR(3.9MHz)	
		FUSE(S)	
F650 ⚠	XBA2C40TB0U	FUSE 125V 4A	
		SWITCH(ES)	
S301	RSH1A024-U	SW, CLOSE DET(DECK2)	
S302	RSH1A024-U	SW, OPEN DET(DECK2)	
S303	RSH1A024-U	SW, CLOSE DET(DECK1)	
S304	RSH1A024-U	SW, OPEN DET(DECK1)	
S650 ⚠	RJJ1SE01-H	SW, AC/DC(JK650)	
S701	RSM0006-P	SW, REST	
S790	RSH1A005	SW, CLOSE	
S791	RSH1A005	SW, OPEN	
S801	EVQ21405R	SW, PRESET EQ	
S802	EVQ21405R	SW, TIMER	
S803	EVQ21405R	SW, -/REV	
S804	EVQ21405R	SW, FWD/+	
S805	EVQ21405R	SW, SET	
S806	EVQ21405R	SW, SUB MENU SELECT	
S807	EVQ21405R	SW, MAIN MENU SELECT	
S808	EVQ21405R	SW, AUTO CD RECORD	
S809	EVQ21405R	SW, TAPE EDIT	
S810	EVQ21405R	SW, REC PAUSE	
S971	RSH1A018-U	SW, MODE(DECK1)	
S971A	RSH1A018-U	SW, MODE(DECK2)	
S972	RSH1A019-U	SW, HALF(DECK1)	
S972A	RSH1A019-U	SW, HALF(DECK2)	

Ref. No.	Part No.	Part Name & Description	Remarks
S973	RSH1A019-U	SW, CrO2 (DECK1)	
S973A	RSH1A019-U	SW, ATS/CrO2 (DECK2)	
S974A	RSH1A019-U	SW, R. REC INH. (DECK2)	
S975A	RSH1A019-U	SW, F. REC INH. (DECK2)	
S976A	RSH1A019-U	SW, ATS/METAL (DECK2)	
S4621	EVQWXS001	SW, C. TOP OPEN/CLOSE/TIMING	
S4651	EVQ21405R	SW, +/F. SKIP	
S4652	EVQ21405R	SW, -/R. SKIP	
S4653	EVQ21405R	SW, STOP/CLEAR	
S4654	EVQ21405R	SW, PLAY/PAUSE	
S4655	EVQ21405R	SW, TUNER/BAND	
S4657	EVQ21405R	SW, DECK 1/2	
S4656	EVQ21405R	SW, FWD PLAY	
S4658	EVQ21405R	SW, STOP	
S4659	EVQ21405R	SW, REV PLAY	
S4660	EVQ21405R	SW, FF	
S4661	EVQ21405R	SW, REW	
S4662	EVQ21405R	SW, OPEN/CLOSE (DECK1)	
S4663	EVQ21405R	SW, OPEN/CLOSE (DECK2)	
S4664	EVQ21405R	SW, VOL -	
S4665	EVQ21405R	SW, POWER, STDBY/ON	
S4666	EVQ21405R	SW, VOL +	
S4667	EVQ21405R	SW, CD OPEN/CLOSE	
S4668	EVQ21405R	SW, TOP PANEL OPEN/CLOSE	
		CONNECTOR (S)	
CP1	RJT028W011-2	CONNECTOR (11P)	
CP13	RJT057W012-1	CONNECTOR (12P)	
CP305, 306	RJR0113	CONNECTOR (4P)	
CP602	RJP6G18ZA	CONNECTOR (6P)	
CP605	RJT060B08	CONNECTOR (8P)	
CP606	RJP2G18ZA	CONNECTOR (2P)	
CP650	RJT029W004	CONNECTOR (4P)	
CP651	RJT029W03V	CONNECTOR (3P)	
CP790	RJP6G17ZA	CONNECTOR (6P)	
CP3011	RJT071H11	CONNECTOR (11P)	
CP3021	RJT071H11	CONNECTOR (11P)	
CP4604	RJP4G18ZA	CONNECTOR (4P)	
CP9711	RJT071H11A	CONNECTOR (11P)	
CP9712	RJT071H09A	CONNECTOR (9P)	
CS11	RJU028W011-1	CONNECTOR (11P)	
CS12	RJU057W012	CONNECTOR (12P)	
CS301, 302	RJU071H11M	CONNECTOR (11P)	
CS303, 304	RJS2A0205M1S	CONNECTOR (5P)	
CS603	RJS1A6836	CONNECTOR (36P)	
CS801	RJS1A6836	CONNECTOR (36P)	
CS971	RJU071H09M	CONNECTOR (9P)	
CS971A	RJU071H11M	CONNECTOR (11P)	
CS7021	RJS1A6723-Q	CONNECTOR (23P)	
CN701	RJU035T016-1	CONNECTOR (16P)	
CN702	RJS1A6723-1Q	CONNECTOR (23P)	

Ref. No.	Part No.	Part Name & Description	Remarks
		TRIMMER	
CT1	RCV10AF1T-S	TRIMMER CAPACITOR	
CT2	ECRLA020E53R	VARIABLE CAPACITOR	
		IC PROTECTOR (S)	
IP602 ⚠	SRUN25	IC PROTECTOR	
IP603 ⚠	SRUN10	IC PROTECTOR	
		DISPLAY	
LCD1	RSL5109-L	LCD	
		JACK (S)	
JK601	RJJ1D25ZA-C	MIX MIC	
JK602	RJJ33T01	CD OUT	
JK603	RJJ33T01	AUX IN	
JK604	RJJ3BT01-1H	HEADPHONES	
JK650 ⚠	RJJ1SE01-H	AC IN (S650)	

Notes : * Capacity valuse are in microfarads (uF) unless specified otherwise, P=Pico-farads (pF) F=Farads (F)
* Resistance values are in ohms, unless specified otherwise, 1K=1,000 (OHM) , 1M=1,000k (OHM)

Ref. No.	Part No.	Values & Remarks
		RESISTORS
R1	ERDS2TJ104	1/4W 100K
R2	ERDS2TJ332	1/4W 3.3K
R3	ERDS2TJ104	1/4W 100K
R5	ERDS2TJ103	1/4W 10K
R6	ERDS2TJ152	1/4W 1.5K
R7	ERDS2TJ330	1/4W 33
R8	ERDS2TJ104	1/4W 100K
R9	ERDS2TJ471	1/4W 470
R10	ERDS2TJ102	1/4W 1K
R11, 12	ERDS2TJ103	1/4W 10K
R13	ERDS2TJ153	1/4W 15K
R14, 15	ERDS2TJ103	1/4W 10K
R17, 18	ERDS2TJ103	1/4W 10K
R19	ERDS2TJ101	1/4W 100
R20	ERDS2TJ151	1/4W 150
R22	ERDS2TJ331	1/4W 330
R24	ERDS2TJ471	1/4W 470
R25	ERDS2TJ104	1/4W 100K
R26, 27	ERDS2TJ102	1/4W 1K
R28	ERDS2TJ334	1/4W 330K
R29	ERDS2TJ331	1/4W 330
R30	ERDS2TJ332	1/4W 3.3K
R31	ERDS2TJ472	1/4W 4.7K
R36, 37	ERDS2TJ223	1/4W 22K
R40	ERDS2TJ105T	1/4W 1M
R41	ERDS2TJ471	1/4W 470
R42	ERDS2TJ103	1/4W 10K
R43, 44	ERDS2TJ222	1/4W 2.2K
R45	ERDS2TJ223	1/4W 22K
R47	ERDS2TJ332	1/4W 3.3K
R49	ERDS2TJ223	1/4W 22K
R52	ERDS2TJ223	1/4W 22K
R54	ERDS2TJ222	1/4W 2.2K
R55, 56	ERDS2TJ223	1/4W 22K
R57	ERDS2TJ103	1/4W 10K
R59	ERDS2TJ471	1/4W 470
R61	ERDS2TJ103	1/4W 10K
R62	ERDS2TJ471	1/4W 470
R63	ERDS2TJ105T	1/4W 1M
R64	ERDS2TJ332	1/4W 3.3K
R65	ERDS2TJ470	1/4W 47
R66	ERDS2TJ332	1/4W 3.3K
R101	ERJ6GEYJ471V	1/10W 470
R103	ERJ6GEYJ682V	1/10W 6.8K
R104	ERJ6GEYJ104V	1/10W 100K
R105	ERJ6GEYJ472V	1/10W 4.7K

Ref. No.	Part No.	Values & Remarks
R106	ERJ6GEYJ223V	1/10W 22K
R107	ERJ6GEYJ820V	1/10W 82
R108	ERDS2TJ103	1/4W 10K
R109	ERJ6GEYJ104V	1/10W 100K
R110	ERJ6GEYJ272V	1/10W 2.7K
R111	ERDS2TJ223	1/4W 22K
R112	ERJ6GEYJ683V	1/10W 68K
R113	ERJ6GEYJ122V	1/10W 1.2K
R114	ERJ6GEYJ682V	1/10W 6.8K
R115	ERJ6GEYJ222V	1/10W 2.2K
R117	ERJ6GEYJ682V	1/10W 6.8K
R201	ERJ6GEYJ471V	1/10W 470
R203	ERJ6GEYJ682V	1/10W 6.8K
R204	ERJ6GEYJ104V	1/10W 100K
R205	ERJ6GEYJ472V	1/10W 4.7K
R206	ERJ6GEYJ223V	1/10W 22K
R207	ERJ6GEYJ820V	1/10W 82
R208	ERJ6GEYJ103V	1/10W 10K
R209	ERJ6GEYJ104V	1/10W 100K
R210	ERJ6GEYJ272V	1/10W 2.7K
R211	ERJ6GEYJ223V	1/10W 22K
R212	ERJ6GEYJ683V	1/10W 68K
R213	ERJ6GEYJ122V	1/10W 1.2K
R214	ERJ6GEYJ682V	1/10W 6.8K
R215	ERJ6GEYJ222V	1/10W 2.2K
R217	ERJ6GEYJ682V	1/10W 6.8K
R301	ERJ6GEYJ102V	1/10W 1K
R302	ERDS2TJ222	1/4W 2.2K
R303	ERJ6GEYJ103V	1/10W 10K
R304	ERJ6GEYJ123V	1/10W 12K
R305	ERJ6GEYJ105	1/10W 1M
R306	ERDS2TJ1R0	1/4W 1.0
R307, 308	ERJ6GEYJ273V	1/10W 27K
R309	ERDS2TJ331	1/4W 330
R310	ERJ6GEYJ103V	1/10W 10K
R311, 312	ERJ6GEYJ152V	1/10W 1.5K
R313	ERJ8GEYJ334V	1/8W 330K
R314	ERJ6GEYJ103V	1/10W 10K
R315	ERJ6GEYJ102V	1/10W 1K
R316	ERDS2TJ180T	1/4W 18
R317, 318	ERDS2TJ150T	1/4W 15
R319	ERJ6GEYJ105	1/10W 1M
R320	ERJ6GEYJ273V	1/10W 27K
R321	ERJ6GEYJ103V	1/10W 10K
R322	ERDS2TJ183T	1/4W 18K
R323	ERDS2TJ472	1/4W 4.7K
R324	ERJ6GEYJ221V	1/10W 220
R325, 326	ERJ8GEYK1R8V	1/8W 1.8
R327	ERJ6GEYJ334V	1/10W 330K

Ref. No.	Part No.	Values & Remarks
R328	ERJ6GEYJ105	1/10W 1M
R329	ERDS2TJ472	1/4W 4.7K
R330, 331	ERJ6GEYJ472V	1/10W 4.7K
R332 ⚠	ERDS1FVJ2R2T	1/2W 2.2
R333	ERJ8GEYJ182V	1/8W 1.8K
R334	ERJ6GEYJ182V	1/10W 1.8K
R335	ERJ6GEYJ103V	1/10W 10K
R336	ERJ6GEYJ682V	1/10W 6.8K
R337	ERJ6GEYJ153V	1/10W 15K
R338, 339	ERJ6GEYJ223V	1/10W 22K
R340, 341	ERJ6GEYJ273V	1/10W 27K
R342, 343	ERDS2TJ273	1/4W 27K
R344	ERDS2TJ822	1/4W 8.2K
R345	ERJ6GEYJ153V	1/10W 15K
R346	ERDS2TJ562	1/4W 5.6K
R348	ERJ6GEYJ822V	1/10W 8.2K
R349	ERJ6GEYJ153V	1/10W 15K
R350	ERJ6GEYJ822V	1/10W 8.2K
R352	ERJ6GEYJ222V	1/10W 2.2K
R353	ERJ6GEYJ472V	1/10W 4.7K
R354, 355	ERJ8GEYJ472V	1/8W 4.7K
R356, 357	ERDS2TJ472	1/4W 4.7K
R358	ERJ8GEYJ104V	1/8W 100K
R359	ERDS2TJ104	1/4W 100K
R360	ERJ6GEYJ104V	1/10W 100K
R361	ERJ6GEYJ182V	1/10W 1.8K
R362	ERJ6GEYJ273V	1/10W 27K
R363	ERJ8GEYJ223V	1/8W 22K
R364	ERJ6GEYJ223V	1/10W 22K
R365	ERJ8GEYJ104V	1/8W 100K
R367	ERJ6GEYK1R8V	1/10W 1.8
R368	ERJ6GEYJ472V	1/10W 4.7K
R369	ERJ8GEYK1R8V	1/8W 1.8
R371-373	ERDS2TJ222	1/4W 2.2K
R401	ERDS2TJ563	1/4W 56K
R402	ERDS2TJ103	1/4W 10K
R403	ERDS2TJ104	1/4W 100K
R405	ERDS2TJ393	1/4W 39K
R406	ERDS2TJ563	1/4W 56K
R407	ERDS2TJ472	1/4W 4.7K
R408	ERDS2TJ103	1/4W 10K
R409	ERDS2TJ104	1/4W 100K
R410	ERDS2TJ223	1/4W 22K
R411	ERDS2TJ393	1/4W 39K
R412	ERDS2TJ562	1/4W 5.6K
R413	ERDS2TJ824	1/4W 820K
R414	ERDS2TJ471	1/4W 470
R416, 417	ERDS2TJ562	1/4W 5.6K
R418	ERDS2TJ103	1/4W 10K

Ref. No.	Part No.	Values & Remarks
R419	ERDS2TJ124T	1/4W 120K
R420	ERDS2TJ472	1/4W 4.7K
R421	ERDS2TJ222	1/4W 2.2K
R424	ERDS2TJ102	1/4W 1K
R425	ERDS2TJ222	1/4W 2.2K
R426, 427	ERDS2TJ681	1/4W 680
R428, 429	ERDS2TJ2R7T	1/4W 2.7
R431, 432	ERDS2TJ331	1/4W 330
R433	ERDS2TJ123	1/4W 12K
R434	ERDS2TJ393	1/4W 39K
R441	ERDS2TJ564	1/4W 560K
R490, 491	ERDS2TJ103	1/4W 10K
R492, 493	ERDS2TJ102	1/4W 1K
R501	ERDS2TJ563	1/4W 56K
R502	ERDS2TJ103	1/4W 10K
R503	ERDS2TJ104	1/4W 100K
R505	ERDS2TJ393	1/4W 39K
R506	ERDS2TJ563	1/4W 56K
R507	ERDS2TJ472	1/4W 4.7K
R508	ERDS2TJ103	1/4W 10K
R509	ERDS2TJ104	1/4W 100K
R510	ERDS2TJ223	1/4W 22K
R511	ERDS2TJ393	1/4W 39K
R512	ERDS2TJ562	1/4W 5.6K
R513	ERDS2TJ824	1/4W 820K
R514	ERDS2TJ471	1/4W 470
R516, 517	ERDS2TJ562	1/4W 5.6K
R518	ERDS2TJ103	1/4W 10K
R519	ERDS2TJ124T	1/4W 120K
R520	ERDS2TJ472	1/4W 4.7K
R521	ERDS2TJ222	1/4W 2.2K
R524	ERDS2TJ102	1/4W 1K
R525	ERDS2TJ222	1/4W 2.2K
R526, 527	ERDS2TJ681	1/4W 680
R528, 529	ERDS2TJ2R7T	1/4W 2.7
R531, 532	ERDS2TJ331	1/4W 330
R533	ERDS2TJ123	1/4W 12K
R534	ERDS2TJ393	1/4W 39K
R541	ERDS2TJ564	1/4W 560K
R590, 591	ERDS2TJ103	1/4W 10K
R592, 593	ERDS2TJ102	1/4W 1K
R601	ERDS2TJ222	1/4W 2.2K
R602	ERDS2TJ472	1/4W 4.7K
R603	ERDS2TJ105T	1/4W 1M
R604	ERDS2TJ471	1/4W 470
R605	ERDS2TJ102	1/4W 1K
R608	EROS2THD5601	1/4W 5.6K
R609, 610	ERDS2TJ103	1/4W 10K
R611	ERDS2TJ183T	1/4W 18K
R612	ERDS2TJ391	1/4W 390
R613	ERDS2TJ183T	1/4W 18K
R614	ERDS2TJ331	1/4W 330

Ref. No.	Part No.	Values & Remarks
R615	ERDS2TJ391	1/4W 390
R618	ERDS2TJ103	1/4W 10K
R619	ERDS2TJ123	1/4W 12K
R620	ERDS2TJ103	1/4W 10K
R621	ERDS2TJ821	1/4W 820
R622	EROS2THD2702	1/4W 27K
R623-625	ERDS2TJ104	1/4W 100K
R627	EROS2THD5601	1/4W 5.6K
R629	ERDS2TJ103	1/4W 10K
R630	ERDS2TJ101	1/4W 100
R631	ERDS2TJ102	1/4W 1K
R632	ERDS2TJ333	1/4W 33K
R633	ERDS2TJ152	1/4W 1.5K
R634	ERDS2TJ681	1/4W 680
R635	ERDS2TJ222	1/4W 2.2K
R636	ERDS2TJ472	1/4W 4.7K
R638-641	ERDS2TJ103	1/4W 10K
R642, 643	ERDS2TJ102	1/4W 1K
R644, 645	ERDS2TJ103	1/4W 10K
R646, 647	ERDS2TJ472	1/4W 4.7K
R648-650	ERDS2TJ474	1/4W 470K
R651	ERDS2TJ101	1/4W 100
R653	ERDS2TJ103	1/4W 10K
R661-664	ERDS2TJ472	1/4W 4.7K
R665	ERDS2TJ1R8T	1/4W 1.8
R674, 675	ERDS2TJ103	1/4W 10K
R676	ERDS2TJ183T	1/4W 18K
R680	ERDS2TJ472	1/4W 4.7K
R681-683	ERDS2TJ103	1/4W 10K
R690	ERDS2TJ182	1/4W 1.8K
R692	ERDS2TJ103	1/4W 10K
R694	ERDS2TJ472	1/4W 4.7K
R695	ERDS2TJ473	1/4W 47K
R696	ERDS2TJ103	1/4W 10K
R697	ERDS2TJ473	1/4W 47K
R698	ERDS2TJ474	1/4W 470K
R699	ERDS2TJ103	1/4W 10K
R701	ERJ6GEYJ100	1/10W 10
R702	ERJ6GEYJ471V	1/10W 470
R703	ERJ6GEYJ823	1/10W 82K
R704	ERJ6GEYJ102A	1/10W 1K
R705	ERJ6GEYJ103V	1/10W 10K
R706	ERJ6GEYJ102A	1/10W 1K
R707	ERJ6GEYJ473V	1/10W 47K
R708	ERJ6GEYJ104V	1/10W 100K
R709	ERJ6GEYJ683V	1/10W 68K
R711	ERJ6GEYJ154V	1/10W 150K
R712	ERJ6GEYJ221V	1/10W 220
R714	ERJ6GEY0R00A	1/10W 0.00
R717-720	ERJ6GEYJ102A	1/10W 1K
R721	ERJ6GEYJ101V	1/10W 100
R722	ERJ6GEYJ563V	1/10W 56K

Ref. No.	Part No.	Values & Remarks
R723	ERJ6GEYJ182V	1/10W 1.8K
R724	ERJ6GEYJ333V	1/10W 33K
R725	ERJ6GEYJ472V	1/10W 4.7K
R726	ERJ6GEYJ473V	1/10W 47K
R727	ERJ6GEYJ103V	1/10W 10K
R728	ERJ6GEYJ392V	1/10W 3.9K
R730	ERJ6GEYJ331V	1/10W 330
R731	ERJ6GEYJ392V	1/10W 3.9K
R734-736	ERJ6GEYJ101V	1/10W 100
R738	ERJ6GEYJ223V	1/10W 22K
R739	ERJ6GEYJ681V	1/10W 680
R741-743	ERJ6GEYJ562V	1/10W 5.6K
R744	ERJ6GEYJ103V	1/10W 10K
R745	ERJ6GEYJ155V	1/10W 1.5M
R748	ERJ6GEYJ182V	1/10W 1.8K
R749	ERJ8GEYJ103V	1/8W 10K
R801	ERDS2TG103T	1/4W 10K
R802	ERDS2TJ102	1/4W 1K
R803	ERDS2TG103T	1/4W 10K
R804	ERDS2TJ102	1/4W 1K
R805	ERDS2TJ122	1/4W 1.2K
R806	ERDS2TJ152	1/4W 1.5K
R807	ERDS2TJ182	1/4W 1.8K
R808	ERDS2TJ272T	1/4W 2.7K
R809	ERDS2TJ392T	1/4W 3.9K
R810	ERDS2TJ562	1/4W 5.6K
R815	ERDS2TJ124T	1/4W 120K
R816	ERDS2TJ103	1/4W 10K
R817	ERDS2TJ104	1/4W 100K
R818	ERDS2TJ222	1/4W 2.2K
R821, 822	ERDS2TJ332	1/4W 3.3K
R823	ERDS2TJ334	1/4W 330K
R824	ERDS2TJ222	1/4W 2.2K
R825	ERDS2TJ102	1/4W 1K
R826	ERDS2TJ106T	1/4W 10M
R828	ERDS2TJ222	1/4W 2.2K
R829	ERDS2TJ105T	1/4W 1M
R830	ERDS2TJ223	1/4W 22K
R831	ERDS2TJ222	1/4W 2.2K
R832	ERDS2TJ823T	1/4W 82K
R833	ERDS2TJ104	1/4W 100K
R834	ERDS2TJ823T	1/4W 82K
R843, 844	ERDS2TJ104	1/4W 100K
R846	ERDS2TJ470	1/4W 47
R849	ERDS2TJ104	1/4W 100K
R852	ERDS2TJ470	1/4W 47
R853-855	ERDS2TJ472	1/4W 4.7K
R860	ERDS2TJ102	1/4W 1K
R971	ERDS2TJ221	1/4W 220
R971A	ERDS2TJ221	1/4W 220
R973	ERDS2TJ393	1/4W 39K
R973A	ERDS2TJ393	1/4W 39K

Ref. No.	Part No.	Values & Remarks
R974	ERDS2TJ393	1/4W 39K
R974A	ERDS2TJ393	1/4W 39K
R4621	ERDS2TJ103	1/4W 10K
R4622	ERDS2TJ153	1/4W 15K
R4651	ERDS2TJ563	1/4W 56K
R4652	ERDS2TJ183T	1/4W 18K
R4653	ERDS2TJ103	1/4W 10K
R4654	ERDS2TJ562	1/4W 5.6K
R4655	ERDS2TJ392T	1/4W 3.9K
R4656	ERDS2TJ272T	1/4W 2.7K
R4657	ERDS2TJ182	1/4W 1.8K
R4658	ERDS2TJ152	1/4W 1.5K
R4659	ERDS2TJ122	1/4W 1.2K
R4660	ERDS2TJ102	1/4W 1K
R4661	ERDS2TJ470	1/4W 47
R4662	ERDS2TJ152	1/4W 1.5K
R4663	ERDS2TJ182	1/4W 1.8K
R4664	ERDS2TJ392T	1/4W 3.9K
R4665	ERDS2TJ562	1/4W 5.6K
R4666	ERDS2TJ103	1/4W 10K
R4667	ERDS2TJ122	1/4W 1.2K
R4668	ERDS2TJ272T	1/4W 2.7K
		CHIP JUMPER(S)
RJ701-704	ERJ8GEY0R00A	1/8W 0.00
RJ707-709	ERJ8GEY0R00A	1/8W 0.00
RJ714-717	ERJ8GEY0R00A	1/8W 0.00
RJ721	ERJ6GEY0R00A	1/10W 0.00
RJ724-726	ERJ6GEY0R00A	1/10W 0.00
		TEST JUMPER(S)
TJ701, 702	EYF8CU	
		CAPACITORS
C4	RCBS1H102KBY	50V 1000P
C5	ECBT1H2R2KC5	50V 2.2P
C6	RCBS1H102KBY	50V 1000P
C9	ECEA1HKN010B	50V 1U
C10	ECBT1C332MR5	16V 3300P
C11	ECEA1AKA101B	10V 100U
C12	ECFR1C473MR	16V 0.047U
C13	ECFR1C103MR	16V 0.01U
C14	ECBT1C103MS5	16V 0.01U
C15	ECBT1H6R8KC5	50V 6.8P
C16, 17	RCBS1H102KBY	50V 1000P
C18	ECBT1H200JC5	50V 20P
C19	ECBT1H220JC5	50V 22P
C20	RCBS1H102KBY	50V 1000P
C21	ECEA1AKA101B	10V 100U

Ref. No.	Part No.	Values & Remarks
C22-24	RCBS1H102KBY	50V 1000P
C25	ECBT1H150JC5	50V 15P
C26	ECBT1H6R8KC5	50V 6.8P
C27	ECBT1H4R7KC5	50V 4.7P
C28, 29	RCBS1H102KBY	50V 1000P
C31	RCBS1H102KBY	50V 1000P
C32, 33	ECBT1H101KB5	50V 100P
C34	ECBT1H680J5	50V 68P
C35	ECBT1H1R5M5	50V 1.5P
C36, 37	RCBS1H102KBY	50V 1000P
C38	ECBT1H331KB5	50V 330P
C39, 40	ECBT1C103MS5	16V 0.01U
C44	ECEA1AU101	10V 100U
C47	ECFR1C223MR	16V 0.022U
C48	ECEA0JU101B	6.3V 100U
C51	ECEA1HKA010B	50V 1U
C52	ECFR1C473MR	16V 0.047U
C58	ECBT1H470J5	50V 47P
C60	ECEA1CKA100B	16V 10U
C61	ECBT1C332MR5	16V 3300P
C62	RCBS1H102KBY	50V 1000P
C63	ECBA1H681KB5	50V 680P
C64	ECFR1C473MR	16V 0.047U
C65	ECBT1H470J5	50V 47P
C66	ECBT1H4R7KC5	50V 4.7P
C67	ECFR1C223MR	16V 0.022U
C68	ECEA1HKA010B	50V 1U
C69, 70	ECFR1C183MR	16V 0.018U
C71	ECEA1HKA2R2B	50V 2.2U
C72	ECEA1HKA010B	50V 1U
C74	ECBT1H471KB5	50V 470P
C75-77	ECEA1HKA010B	50V 1U
C80, 81	ECBT1H331KB5	50V 330P
C82	ECBT1H150JC5	50V 15P
C83	ECBT1H331KB5	50V 330P
C84	ECBT1C103MS5	16V 0.01U
C86	ECBT1H331KB5	50V 330P
C87	ECBT1C103MS5	16V 0.01U
C88	RCBS1H102KBY	50V 1000P
C89	ECBT1H101KB5	50V 100P
C102	ECUV1H331KBN	50V 330P
C103	ECUV1H681KBN	50V 680P
C104	ECEA1EKS4R7I	25V 4.7U
C105	ECEA0JKA470I	6.3V 47U
C106	ECUV1E183KBN	H 25V 0.018U
C107, 108	ECEA1EKA4R7I	25V 4.7U
C109	ECEA1EKS4R7I	25V 4.7U
C110	ECUV1H331KBN	50V 330P
C111	ECUV1C104KBM	16V 0.1U
C112	ECEA1EKA4R7I	25V 4.7U
C113	ECUV1H102KBM	50V 1000P
C114	ECEA1HKA010I	50V 1U

Ref. No.	Part No.	Values & Remarks
C115	ECEA1EKA4R7I	25V 4.7U
C116	ECEA1EKS4R7I	25V 4.7U
C117, 118	ECEA1EKA4R7I	25V 4.7U
C119	ECUV1H681KBN	50V 680P
C120	ECUV1H682KBN	50V 6800P
C122	ECUV1H471KBN	50V 470P
C202	ECUV1H331KBN	50V 330P
C203	ECUV1H681KBN	50V 680P
C204	ECEA1EKS4R7I	25V 4.7U
C205	ECEA0GKS470I	6.3V 47U
C206	ECUV1E183KBN	25V 0.018U
C207, 208	ECEA1EKA4R7I	25V 4.7U
C209	ECEA1EKS4R7I	25V 4.7U
C210	ECUV1H331KBM	50V 330P
C211	ECUV1C104KBN	16V 0.1U
C212	ECEA1EKA4R7I	25V 4.7U
C213	ECUV1H102KBN	50V 1000P
C214	ECEA1HKA010I	50V 1U
C215-218	ECEA1EKA4R7I	25V 4.7U
C219	ECUV1H681KBN	50V 680P
C220	ECUV1H682KBN	50V 6800P
C222	ECUV1H471KBN	50V 470P
C301	ECUV1H471KBN	50V 470P
C302	ECBT1H471KB5	50V 470P
C303, 304	ECEA0JKA470I	6.3V 47U
C305	ECUV1E223MBN	25V 0.022U
C306	ECEA1AKA101I	10V 100U
C307	ECEA1AKS101I	10V 100U
C308	ECUV1H472KBN	50V 4700P
C309	ECEA0JKA470I	6.3V 47U
C310	ECEA1EKA4R7I	25V 4.7U
C312	ECUV1H471KBN	50V 470P
C313	ECEA1HKA0R1I	50V 0.1U
C314	ECUV1C104KBN	16V 0.1U
C315	ECEA2AN2R2SI	100V 2.2U
C316	ECQP2A821JZT	100V 820P
C317	ECQP2E472JZT	250V 4700P
C318	ECQB1H393JF3	50V 0.039U
C319	ECEA1AKA101I	10V 100U
C320	ECUV1H103MBN	50V 0.01U
C321	ECEA1HKA0R1I	50V 0.1U
C322, 323	ECUV1H102KBN	50V 1000P
C324, 325	ECUV1H103MBN	50V 0.01U
C326	ECUV1H332MBN	50V 3300P
C327	ECEA0JKA470I	6.3V 47U
C328	ECEA1AKA101I	10V 100U
C329	ECEA1CKA101	16V 100U
C330	ECUV1H104ZFN	50V 0.1U
C331	ECEA1CKA101	16V 100U
C332	ECEA1AKA101I	10V 100U
C333	ECUV1H104ZFN	50V 0.1U
C334	ECBT1H104ZF5	50V 0.1U

Ref. No.	Part No.	Values & Remarks
C335, 336	ECUV1H103MBN	50V 0.01U
C337, 338	ECUV1H102KBN	50V 1000P
C339	ECEA1AKS101I	10V 100U
C341, 342	ECUV1H471KBN	50V 470P
C343	ECUV1H471KBM	50V 470P
C344	ECUV1H103MBN	50V 0.01U
C345	ECQP2A122JZT	100V 1200P
C367	ECEA1EKS4R7I	25V 4.7U
C368	ECEA0JKA470I	6.3V 47U
C401	ECEA1CU100	16V 10U
C402	ECBT1C472MR5	16V 4700P
C403, 404	ECFR1C104KR	16V 0.1U
C405	ECEA1CU100	16V 10U
C406	ECEA1HUR22	50V 0.22U
C407	ECEA1HKAR15B	50V 0.15U
C408	ECEA1HU010	50V 1U
C409	ECBT1C332MR5	16V 3300P
C410	ECEA1EU4R7	25V 4.7U
C411	ECEA1HU010	50V 1U
C412	ECBT1H101KB5	50V 100P
C413	ECEA1HUR47B	50V 0.47U
C415, 416	ECEA1AU101	10V 100U
C417, 418	ECBT1C222MR5	16V 2200P
C419	ECQV1H104JM3	50V 0.1U
C420	ECEA1CU100	16V 10U
C421	ECEA1AU101	10V 100U
C423	ECEA1AU222E	10V 2200U
C424	ECEA1AU101	10V 100U
C426	ECEA1HU010	50V 1U
C427	ECBT1H101KB5	50V 100P
C428	ECEA1HUR22	50V 0.22U
C435	ECQV1H104JM3	50V 0.1U
C451	ECFR1C473KR	16V 0.047U
C452	ECFR1C104KR	16V 0.1U
C453	ECFR1C223MR	16V 0.022U
C454	ECBT1H102KB5	50V 1000P
C501	ECEA1CU100	16V 10U
C502	ECBT1C472MR5	16V 4700P
C503, 504	ECFR1C104KR	16V 0.1U
C505	ECEA1CU100	16V 10U
C506	ECEA1HUR22	50V 0.22U
C507	ECEA1HKAR15B	50V 0.15U
C508	ECEA1HU010	50V 1U
C509	ECBT1C332MR5	16V 3300P
C510	ECEA1EU4R7	25V 4.7U
C511	ECEA1HU010	50V 1U
C512	ECBT1H101KB5	50V 100P
C513	ECEA1HUR47B	50V 0.47U
C515, 516	ECEA1AU101	10V 100U
C517, 518	ECBT1C222MR5	16V 2200P
C519	ECQV1H104JM3	50V 0.1U
C520	ECEA1CU100	16V 10U

Ref. No.	Part No.	Values & Remarks
C521	ECEA1AU101	10V 100U
C523	ECEA1AU222E	10V 2200U
C524	ECEA1AU101	10V 100U
C526	ECEA1HU010	50V 1U
C527	ECBT1H101KB5	50V 100P
C528	ECEA1HUR22	50V 0.22U
C535	ECQV1H104JM3	50V 0.1U
C551	ECFR1C473KR	16V 0.047U
C552	ECFR1C104KR	16V 0.1U
C553	ECFR1C223MR	16V 0.022U
C554	ECBT1H102KB5	50V 1000P
C601	ECEA1AU101	10V 100U
C602	ECEA1CKA100B	16V 10U
C603	ECBT1H471KB5	50V 470P
C604	ECEA1HU010	50V 1U
C605, 606	ECEA1AU101	10V 100U
C609	ECA1AKF820B	10V 82U
C610	ECEA1HU010	50V 1U
C611, 612	ECA1AKF820B	10V 82U
C613	ECEA1AU220B	10V 22U
C614-616	ECEA1CU100	16V 10U
C617	ECEA1AU101	10V 100U
C620	ECEA1CU100	16V 10U
C623	ECEA0JU221	6.3V 220U
C624	ECBT1H471KB5	50V 470P
C626	ECEA1AU220B	10V 22U
C629, 630	ECEA1CU221	16V 220U
C631 ⚠	ECA1EM472E	25V 4700U
C632-635	ECBT1H102KB5	50V 1000P
C636	ECBT1H330J5	50V 33P
C637	ECFR1C104KR	16V 0.1U
C642	ECEA1EU4R7	25V 4.7U
C643	ECEA1CKA100B	16V 10U
C644	ECA1AKF820B	10V 82U
C645	ECEA1CKA100B	16V 10U
C646	ECEA1AU101	10V 100U
C663	ECBT1H101KB5	50V 100P
C666	ECBT1C103MS5	16V 0.01U
C675	ECEA0JKA220B	6.3V 22U
C676	ECBT1H102KB5	50V 1000P
C677	ECA1EFQ390B	25V 39U
C678	ECEA1CKA101B	16V 100U
C680-683	ECQV1H184JM3	50V 0.18U
C684	ECKR1H473ZF5	50V 0.047U
C701	ECEA0JKA220	6.3V 22U
C702	ECEA1HKA010I	50V 1U
C703	ECEA0JKA101I	6.3V 100U
C704	ECUZ1E104MBN	25V 0.1U
C705	ECEA1HKA010I	50V 1U
C706	ECUE1H101JCN	50V 100P
C707	ECUV1E273KBN	25V 0.027U
C708	ECUE1H472KBN	50V 4700P

Ref. No.	Part No.	Values & Remarks
C709	ECUE1C473KBN	16V 0.047U
C710	ECUE1H152KBN	50V 1500P
C711, 712	ECUZ1E104MBN	25V 0.1U
C713	ECUV1C104MBM	16V 0.1U
C714	ECEA0JKA101I	6.3V 100U
C715	ECEA0JKA470I	6.3V 47U
C716	ECUE1H561KBN	50V 560P
C717	ECUZ1E104MBN	25V 0.1U
C718	ECUV1C224KBM	16V 0.22U
C721, 722	ECUE1H270JCN	50V 27P
C723	ECEA1AKA221I	10V 220U
C724	ECUV1C104MBM	16V 0.1U
C725, 726	ECUE1H102KBN	50V 1000P
C727, 728	ECEA1HPK010I	50V 1U
C730	ECUZ1E104MBN	25V 0.1U
C731, 732	ECEA0JK221I	6.3V 220U
C733	ECUZ1E104MBN	25V 0.1U
C734	ECEA1AKA221I	10V 220U
C735	ECUZNE104MBN	25V 0.1U
C736	ECUZ1E104MBN	25V 0.1U
C737	ECUZNE104MBN	25V 0.1U
C738	ECUV1C154KBN	16V 0.15U
C742	ECUV1E273KBN	25V 0.027U
C743	ECUZ1E104MBN	25V 0.1U
C744	ECUE1E822KBN	25V 8200P
C745	ECUE1C473MBN	16V 0.047U
C746	ECUE1H050DCN	50V 5P
C747	ECUE1H222KBN	50V 2200P
C748	ECUV1H471KBM	50V 470P
C790	ECA1AKF820E	10V 82U
C801	ECBT1H561KB5	50V 560P
C802	ECBT1H102KB5	50V 1000P
C804	ECEA0JK470	6.3V 47U
C805	ECBT1H102KB5	50V 1000P
C806	ECEA0JKS101B	6.3V 100U
C807, 808	ECBT1H102KB5	50V 1000P
C809	ECBT1C103MS5	16V 0.01U
C810	ECBT1H820KB5	50V 82P
C811	ECBT1H470J5	50V 47P
C812	ECBT1H180JC5	50V 18P
C813	ECBT1H220JC5	50V 22P
C814, 815	ECBT1H101KB5	50V 100P
C816	ECBT1H561KB5	50V 560P
C821-824	ECBT1H561KB5	50V 560P
C825-827	ECBT1H331KB5	50V 330P
C828-830	ECBT1H471KB5	50V 470P
C831	ECBT1C103MS5	16V 0.01U
C4621	ECBT1H561KB5	50V 560P
C4622	ECEA1AU101BG	10V 100U
C4651	ECBT1H561KB5	50V 560P
C5601, 5602	ECBT1H102KB5	50V 1000P

Ref. No.	Part No.	Part Name & Description	Remarks
		LOADING MECHANISM	
101	RFKJLCH505BK	TRAVERSE CHASSIS ASS'Y	
101-1	RDG0142	LOADING GEAR	
101-2	RDG0193	LOADING GEAR(1)	
101-3	RDP0065	PULLEY	
102	REM0019	MOTOR ASS'Y	
103	RMA0339	HOLDER	
104	RME0063	LOCK LEVER SPRING	
105	RME0087	SPRING	
106	RMG0158	BELT	
107	RML0177	LEVER	
108	RML0178-1	LOCK LEVER	
109	RMM0059-1	SLIDE PLATE(2)	
110	RMM0079	SLIDE PLATE(1)	
111	XTN26+6G	SCREW	
112	XYN2+F6FZ	SCREW	
113	RDB0036	GUIDE HOLDER	
114	RHD20010	SCREW	
115	RMU0046	GUIDE SHAFT	
116	RHM245ZA	MAGNET	
117	RMA0327-1	DISC CLAMPER	
118	RMR0334	MAGNET HOLDER	
119	RXQ0123	DISC HOLDER	
120	RFKNLPG440-K	DRIVE RACK ASS'Y	
121	RGQ0088-K1	DISC TRAY	
122	RHD20009-1	SCREW	
123	XTB3+25GFZ	SCREW	
124	XTN26+6G	SCREW	
125	XTN3+8JFZ	SCREW	
126	RAE0113Z	TRAVERSE UNIT ASS'Y	
126-1	SHGD112	RUBBER(A)	
126-2	SHGD113-1	RUBBER(B)	
126-3	XQS2+A35FZ	SCREW	
127	RME0109	SPRING	
128	RME0142	SPRING	
129	RMS0123-1	PIN(A)	
130	RMS0350	PIN(B)	
131	RMR0698-K	CHASSIS	
132	XTV2+6G	SCREW	

■ Loading Unit Parts Location

Note:
When changing mechanism parts, apply the specified grease to areas marked "XX" as shown in the drawing.

Ref. No.	Part No.
❶	RFKXEM30L

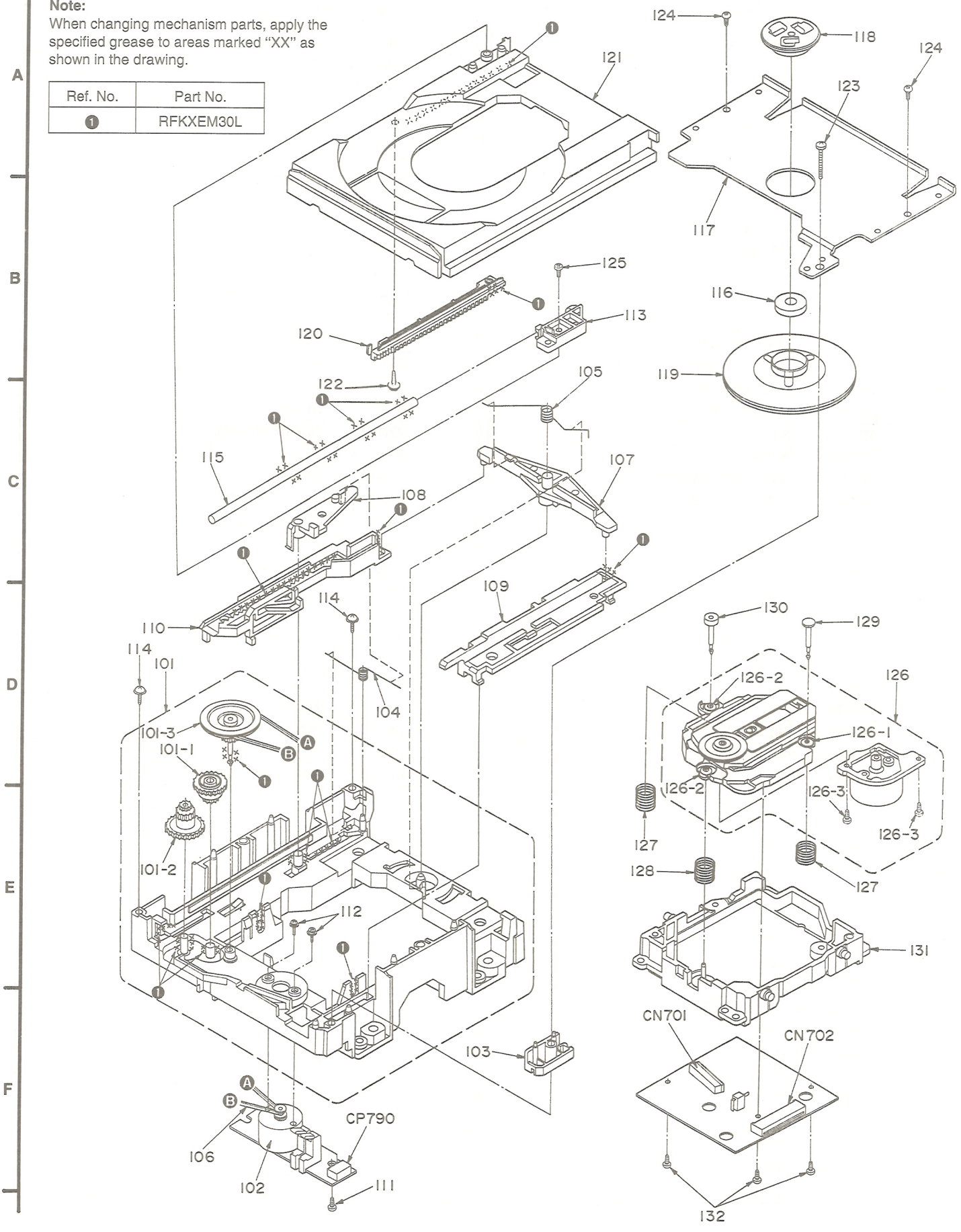

Ref. No.	Part No.	Part Name & Description	Remarks
		CABINET PARTS	
1	RGK0581-K	ORNAMENT, CD TRAY	
2	RKK0041-K	BATTERY COVER	
3	RKQ0150-K	TOP PANEL	
4	XTV3+12G	SCREW	
5	XTN3+40GY	SCREW	
6	REE0523	FPC	
7	EYF52BC	FUSE HOLDER (FH601, 602)	
8	REX0514	WIRE ASS'Y (W653)	
9	RJC511ZB	BATT, SPRING	
10	RJC751ZA	BATT. SPRING (BACK UP)	
11	RJC931ZC	BATT. SPRING	
12	REX0517Y	CABLE ASS'Y (CW790)	
13	REX0515	CABLE ASS'Y (W650)	
14	REX0516Y	CABLE ASS'Y (CW601)	
15	RWJ470610OMM	FLAT CABLE (W601)	
16	XTV3+10F	SCREW	
17	RMG0355-K	RUBBER	
18	RGU0947C-K	BUTTON, FRONT OPERATION	
19	RGU0948-K	BUTTON, TOP OPERATION	
20	RHD30006	SCREW	
21	RJR0111	ANT. TERMINAL	
22	RMK0214	CHASSIS	
23	RMK0217	CHASSIS	
24	RSC0330	SHIELD PLATE	
25	RXA0138	SHIELD PLATE ASS'Y	
26	RDB0056	HOLDER	
27	RDB0057	HOLDER	
28	REE0524	FPC	
29	RGU0949-K	BUTTON, MANU CONT.	
30	RGU0950-K	BUTTON, DECK CONT.	
31	RKF0329B-K	DISPLAY PANEL (OUTER)	
32	RKF0330-K	DISPLAY PANEL (INNER)	
33	RKQ0151-K	DISPLAY PANEL HOLDER	
34	RMB0318	SPRING	
35	RMG0249-K1	RUBBER CAP	
36	RMR0699-K	PANEL ROCK	
37	RMS0330	GEAR	
38	RDG0250	GEAR	
39	RDG0251	GEAR	
40	REX0517Y	CABLE ASS'Y (CW4602)	
41	RWJ4703080QQ	FLAT CABLE (W4605)	
42	RMK0216	CHASSIS	
43	RMR0700-W	ANGLE	
44	RSC0331	SHIELD PLATE	
45	XSN26+3	SCREW	
46	XTV26+12F	SCREW	
47	XTV26+8G	SCREW	
48	XTN26+8GFZ	SCREW	
49	EAS8PH64C	SPEAKER (MID)	

Ref. No.	Part No.	Part Name & Description	Remarks
50	EAS8PL159A	SPEAKER (WOOFER)	
51	REX0519Y	CABLE ASS'Y	
52	RHD30044	SCREW	
53	RKP0026-W	SPEAKER COVER	
54	RKP0027-W	SPEAKER COVER	
55	RMK0213	FRAME	
56	RKS0154E-K	REAR CABINET	(EG)
56	RKS0154F-K	REAR CABINET	(EB)
57	RYH0013-K	HANDLE	
58	XEARR175ED-Y	TELESCOPIC ANTENNA	
59	XYN3+F12FY	SCREW	
61	RSC0326	SHIELD PLATE	
62	RFKKXDT75E-K	FRONT CABINET ASS'Y	
62-1	RFKGXDT75E-K	PANEL ASS'Y	
62-2	RGL0213	LEADING LIGHT PANEL	
62-3	XTV26+8G	SCREW	
63	RFKNXDT75AK	SLIP GEAR ASS'Y	
64	RMK0215	CHASSIS	
65	RYF0260-K	CASSETTE LID (DECK1)	
66	RYF0261-K	CASSETTE LID (DECK2)	
67	RFKPXDT75-K	MOTOR ASS'Y	
68	RFKBXDT75AK	BATT. P. C. B. (MAIN)	
69	RFKBXDT75BK	BATT. P. C. B. (CLOCK/MEMO)	
70	RMR0763-K	SPACER	
71	RSC0374	SHIELD PLATE	
72	RMN0229	LCD HOLDER	
73	RSL5109-L	LCD (LCD1)	
74	RGP0343B-Q	LCD PANEL	
75	XTW2+8P	SCREW	
76	RMC0161	SPRING	
77	RMG0349-K	RUBBER	
79	RMB0346	SPRING	
80	RMR0727-W	WASHER	
81	RAT0010	TWEETER (Z401, Z501)	

■ Cabinet Parts Location

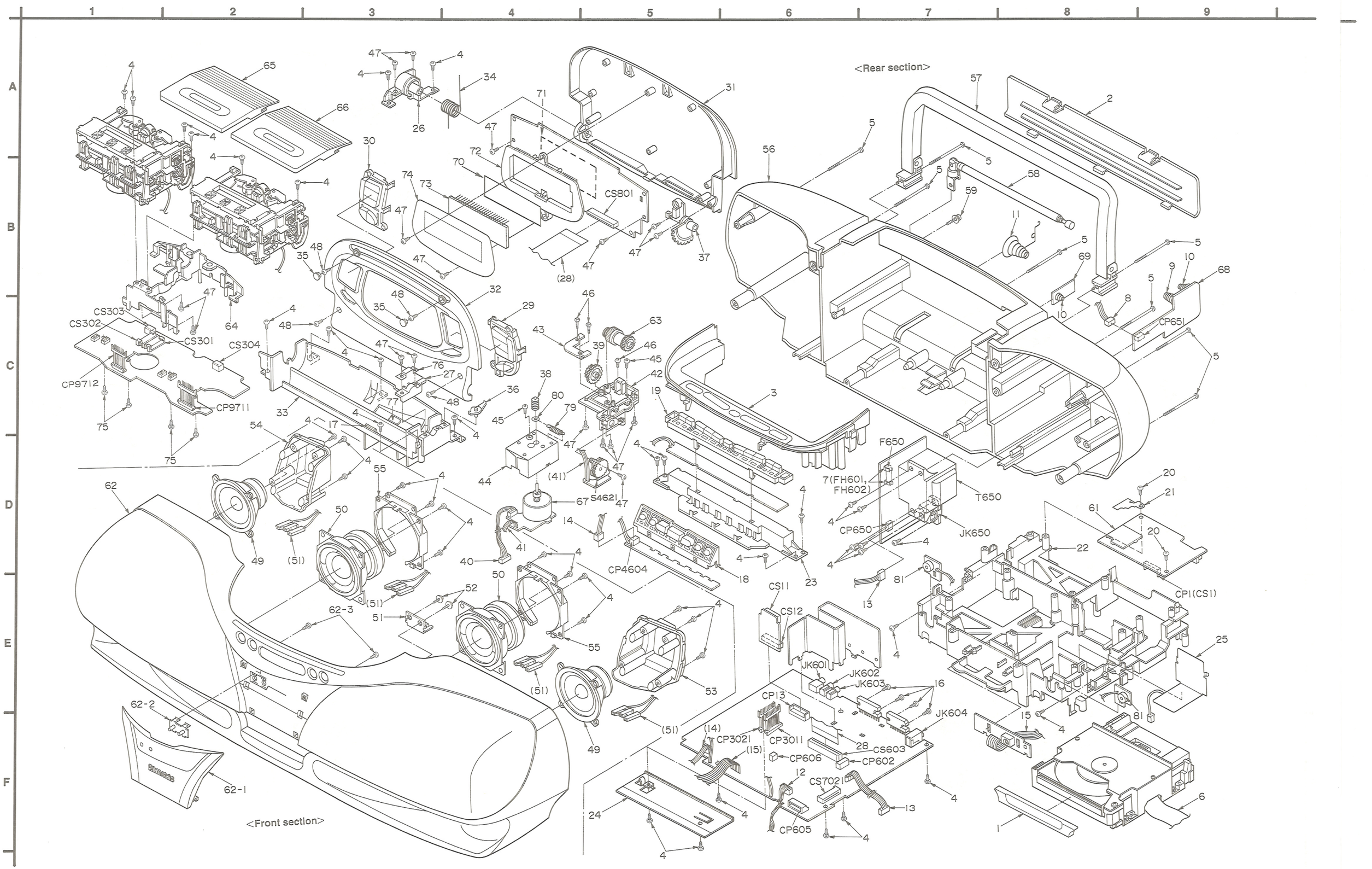

■ Mechanism Parts Location •DECK1 (PLAYBACK)

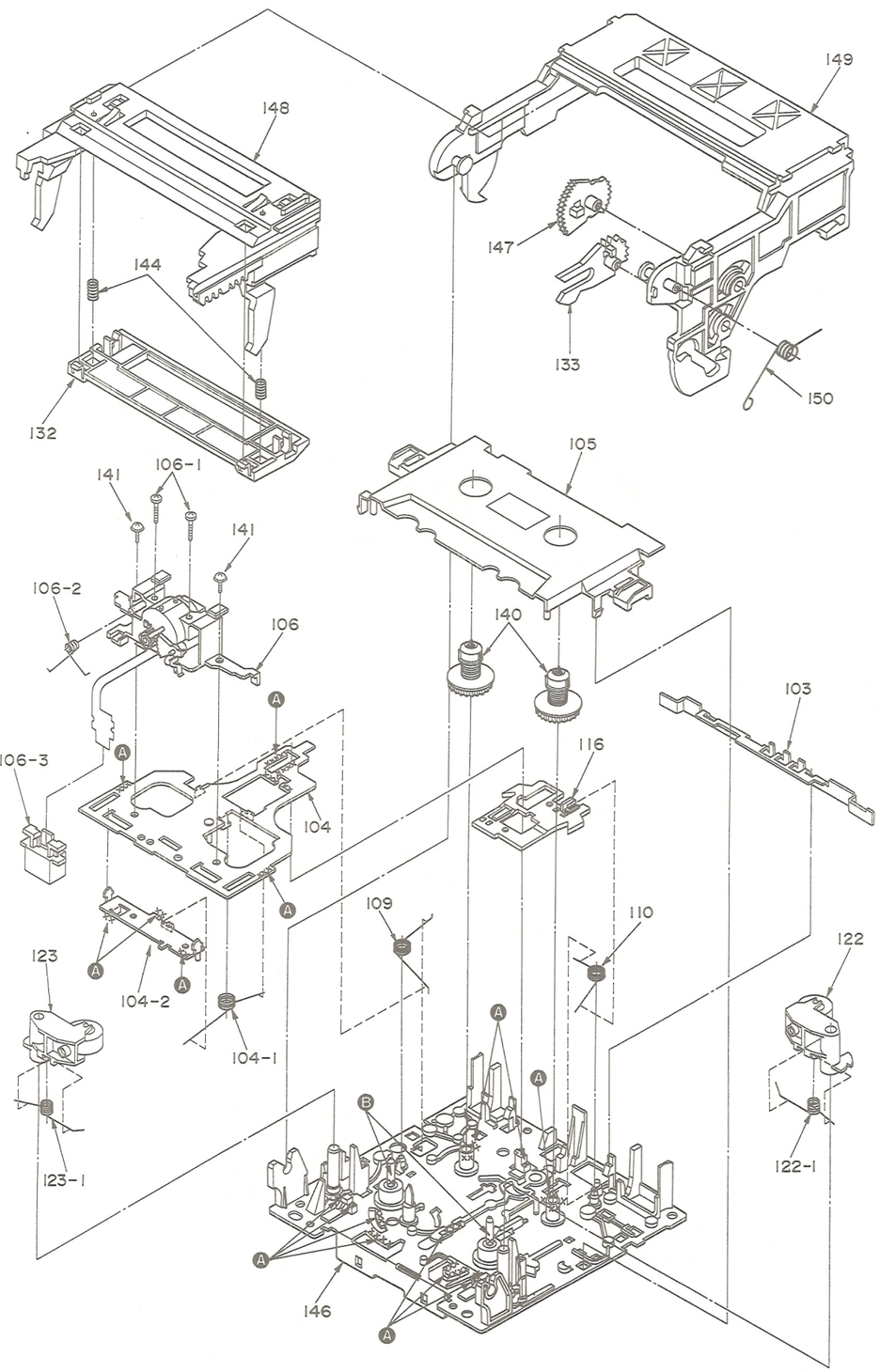

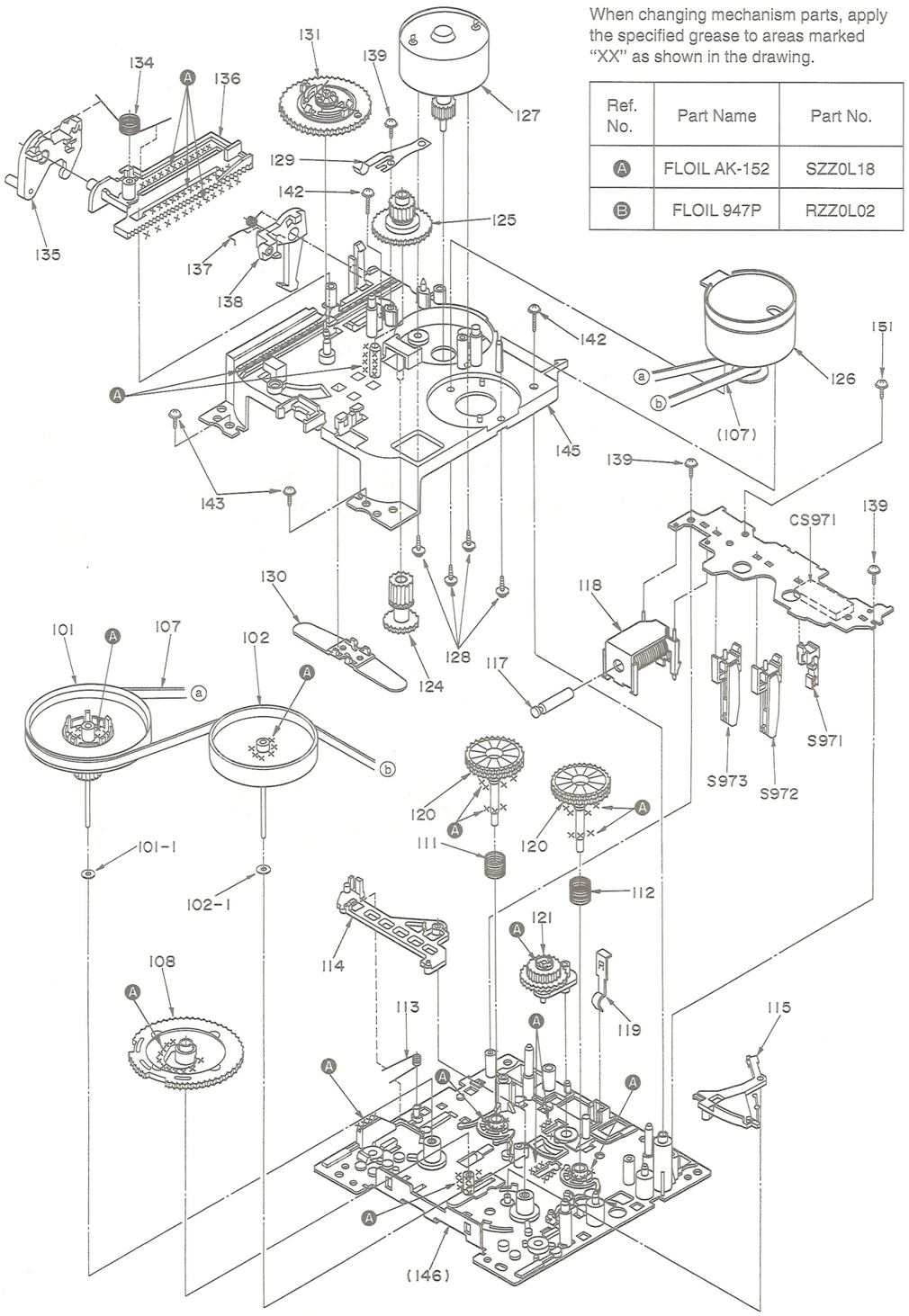

Note:
When changing mechanism parts, apply the specified grease to areas marked "XX" as shown in the drawing.

Ref. No.	Part Name	Part No.
Ⓐ	FLOIL AK-152	SZZ0L18
Ⓑ	FLOIL 947P	RZZ0L02

■ Mechanism Parts Location • DECK2 (RECORD/PLAYBACK)

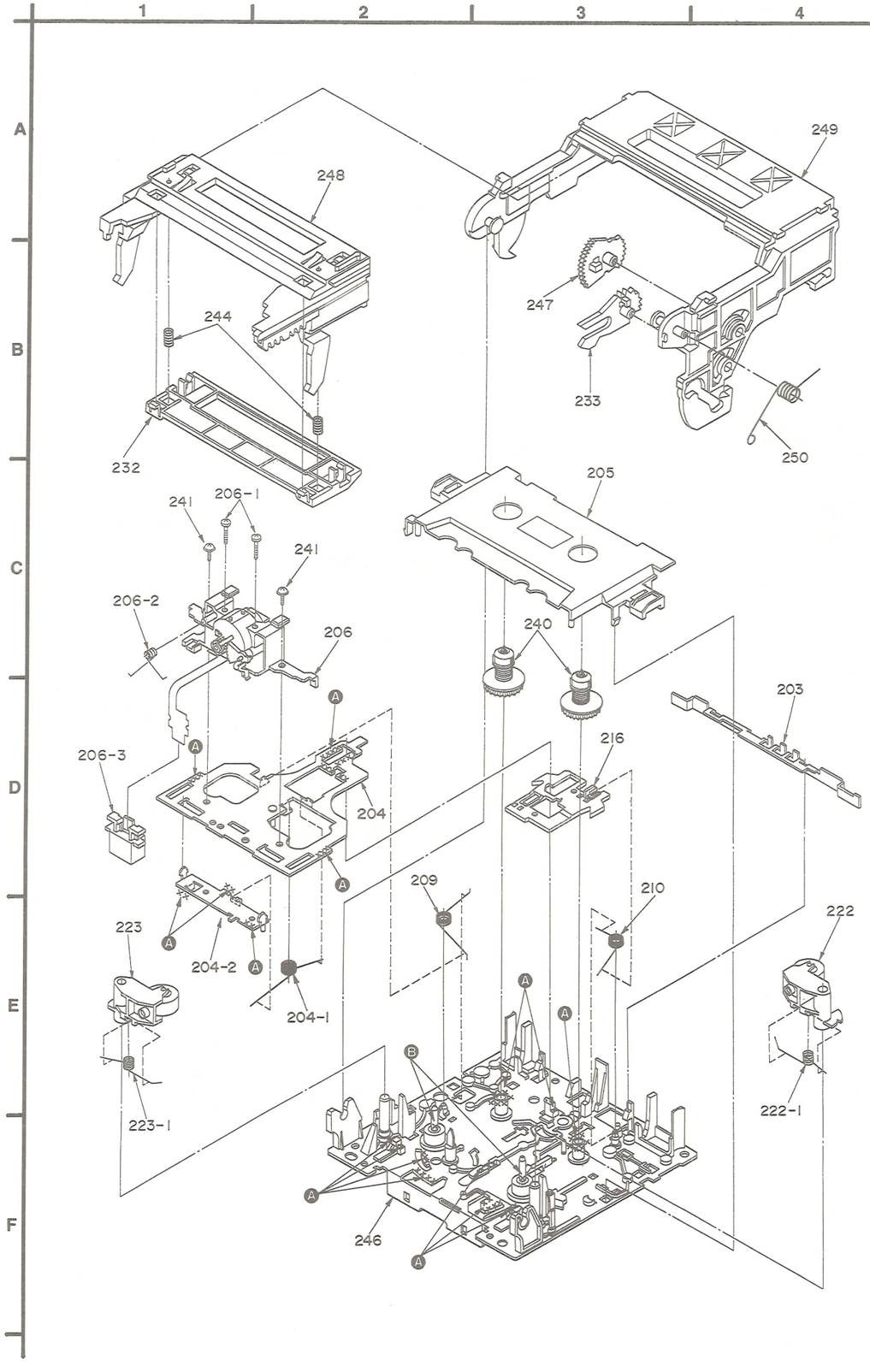

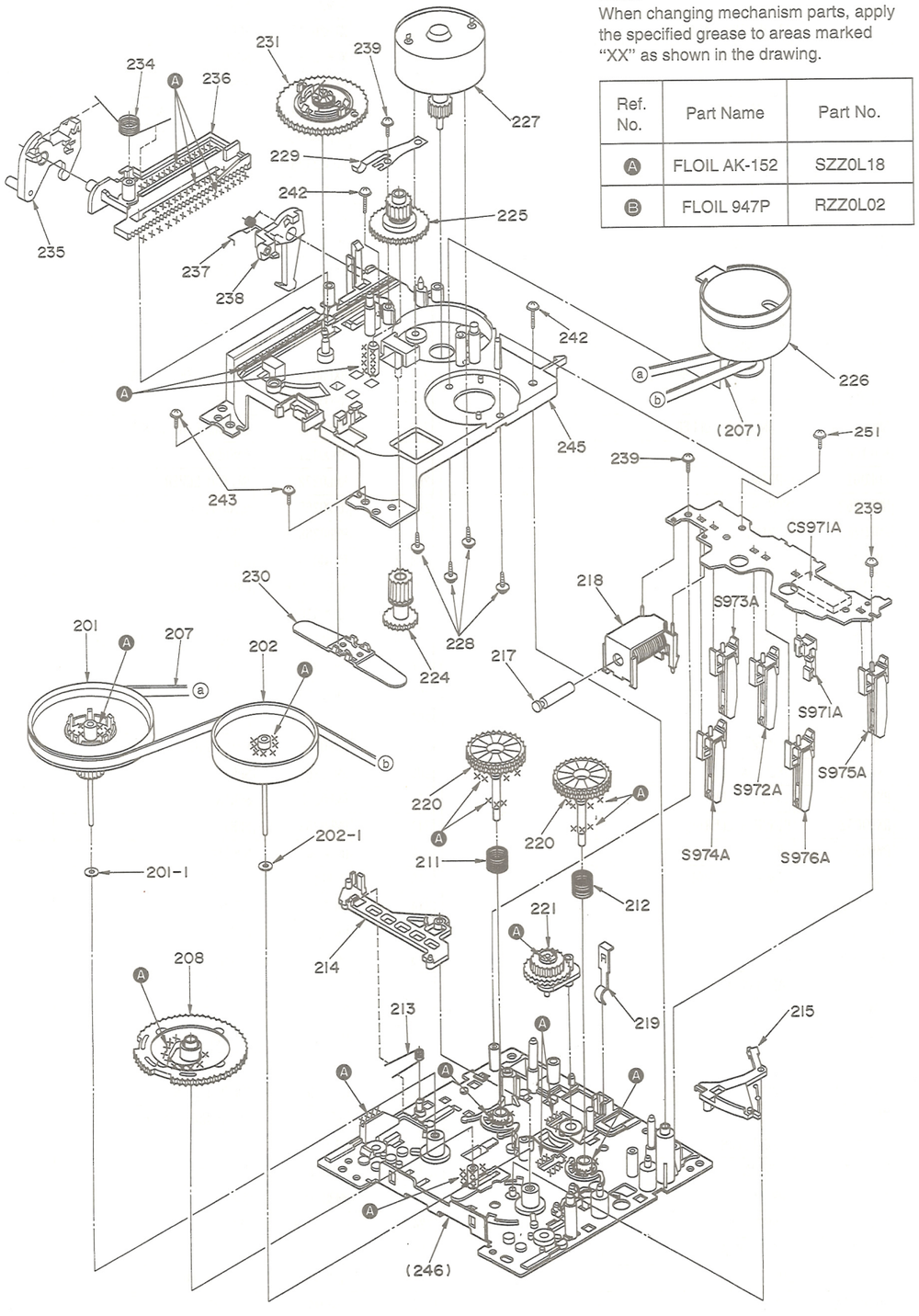

Note:
When changing mechanism parts, apply the specified grease to areas marked "XX" as shown in the drawing.

Ref. No.	Part Name	Part No.
Ⓐ	FLOIL AK-152	SZZ0L18
Ⓑ	FLOIL 947P	RZZ0L02

Ref. No.	Part No.	Part Name & Description	Remarks
		MECHANISM PARTS	
		DECK1(P.B)	
101	RXF0045	FLYWHEEL(F) ASS'Y	
101-1	RMQ0420	WASHER	
102	RXF0046	FLYWHEEL(R) ASS'Y	
102-1	RMQ0421	WASHER	
103	RML0272	SWITCH LEVER	
104	RXQ0265	HEAD BASE	
104-1	RMB0266-1	SPRING	
104-2	RXM0036	ROD	
105	RGK0582-K	ORNAMENT PLATE	
106	RXQ0312-1	HEAD ASS'Y(P/B)	
106-1	RHD17015	AZIMUTH ADJUSTMENT SCREW	
106-2	RMB0352	SPRING	
106-3	RMQ0360A	CONNECTOR HOLDER	
107	RDV108ZA	BELT	
109	RDK0019A	SPRING	
110	RMB0262	SPRING	
111	RMB0263	SPRING	
112	RMB0264	SPRING	
113	RUW147ZA	SPRING	
114	RML0267A	LEVER	
115	RML0268A	LEVER	
116	RMM0091A	BRAKE ROD	
117	RMS0398	PLUNGER	
118	RSJ0003	SOLENOID	
119	RUS609ZC	SPRING	
120	RXG0036	REEL TABLE	
121	RXL0106	IDLER LEVER	
122	RXP0052	PINCH ROLLER(F)	
122-1	RMB0259	SPRING	
123	RXP0053	PINCH ROLLER(R)	
123-1	RMB0260	SPRING	
124	RDG0206A-1	GEAR	
125	RDG0209A	GEAR	
126	REM0036-1	CAPSTAN MOTOR	
127	REM0043	REEL MOTOR	
128	RHD26013	SCREW	
129	RMC0169	SPRING	
130	RMQ0314A	SPACER	
131	RXG0037	GEAR	
132	RMQ0401A	STABILIZER	
133	RML0275A	LIFT ARM	
134	RMB0269	SPRING	
135	RML0270A-1	LEVER	
136	RMQ0312A	DRIVE GEAR	
137	RMB0268	SPRING	
138	RML0271A	LEVER	
139	XTW2+6S	SCREW	
140	RXR0018	REEL TABLE	

Ref. No.	Part No.	Part Name & Description	Remarks
141	XTW2+5L	SCREW	
142	XTW26+12S	SCREW	
143	XTW26+6L	SCREW	
144	RMB0324	SPRING	
145	RFKJSCH404AK	SUB CHASSIS ASS'Y	
146	RFKJSCH404BK	CHASSIS ASS'Y	
147	RDG0212A	LIFT GEAR	
148	RGQ0121-K	LIFT	
149	RKF0334-K	CASSETTE HOLDER	
150	RME0143	SPRING	
151	XYC2+JF16	SCREW	
		DECK2(R/P)	
201	RXF0045	FLYWHEEL(F) ASS'Y	
201-1	RMQ0420	WASHER	
202	RXF0046	FLYWHEEL(R) ASS'Y	
202-1	RMQ0421	WASHER	
203	RML0272	SWITCH LEVER	
204	RXQ0265	HEAD BASE	
204-1	RMB0266-1	SPRING	
204-2	RXM0036	ROD	
205	RGK0582-K	ORNAMENT PLATE	
206	RXQ0316-1	HEAD ASS'Y(R/P)	
206-1	RHD17015	AZIMUTH ADJUSTMENT SCREW	
206-2	RMB0352	SPRING	
206-3	RMQ0360A	CONNECTOR HOLDER	
207	RDV108ZA	BELT	
208	RDK0019A	MAIN GEAR	
209	RMB0261	SPRING	
210	RMB0262	SPRING	
211	RMB0263	SPRING	
212	RMB0264	SPRING	
213	RUW147ZA	SPRING	
214	RML0267A	LEVER	
215	RML0268A	LEVER	
216	RMM0091A	BRAKE ROD	
217	RMS0398	PLUNGER	
218	RSJ0003	SOLENOID	
219	RUS609ZC	SPRING	
220	RXG0036	REEL TABLE	
221	RXL0106	IDLER LEVER	
222	RXP0052	PINCH ROLLER(F)	
222-1	RMB0259	SPRING	
223	RXP0053	PINCH ROLLER(R)	
223-1	RMB0260	SPRING	
224	RDG0206A-1	GEAR	
225	RDG0209A	GEAR	
226	REM0036-1	CAPSTAN MOTOR	
227	REM0043	REEL MOTOR	
228	RHD26013	SCREW	
229	RMC0169	SPRING	

Ref. No.	Part No.	Part Name & Description	Remarks
230	RMQ0314A	SPACER	
231	RXG0037	GEAR	
232	RMQ0401A	STABILIZER	
233	RML0275A	LIFT ARM	
234	RMB0269	SPRING	
235	RML0270A-1	LEVER	
236	RMQ0312A	DRIVE GEAR	
237	RMB0268	SPRING	
238	RML0271A	LEVER	
239	XTW2+6S	SCREW	
240	RXR0018	REEL TABLE	
241	XTW2+5L	SCREW	
242	XTW26+12S	SCREW	
243	XTW26+6L	SCREW	
244	RMB0324	SPRING	
245	RFKJSCH404AK	SUB CHASSIS ASS'Y	
246	RFKJSCH404BK	CHASSIS ASS'Y	
247	RDG0212A	LIFT GEAR	
248	RGQ0121-K	LIFT	
249	RKF0334-K	CASSETTE HOLDER	
250	RME0143	SPRING	
251	XYC2+JF16	SCREW	

Ref. No.	Part No.	Part Name & Description	Remarks
		PACKING MATERIAL	
P1	RPG1882	GIFT BOX	(EB)
P1	RPG1881	GIFT BOX	(EG)
P2	RPN0724	PAD ASS'Y	
P3	RPH653ZA	PROTECTION COVER	
		ACCESSORIES	
A1	RAK-RX135WH	REMOTE CONTROLLER	
A1-1	RKK0057-K	BATTERY COVER	
A2 ⚠	RJA0019-2K	AC POWER CORD	(EG)
A2 ⚠	VJA0733	AC POWER CORD	(EB)
A3	RQT2317-B	INSTRUCTIONS MANUAL	(EB)
A4	RQT2318-G	INSTRUCTIONS MANUAL	(EG)
A5	RQT2319-E	INSTRUCTIONS MANUAL	(EG)

■ Packaging

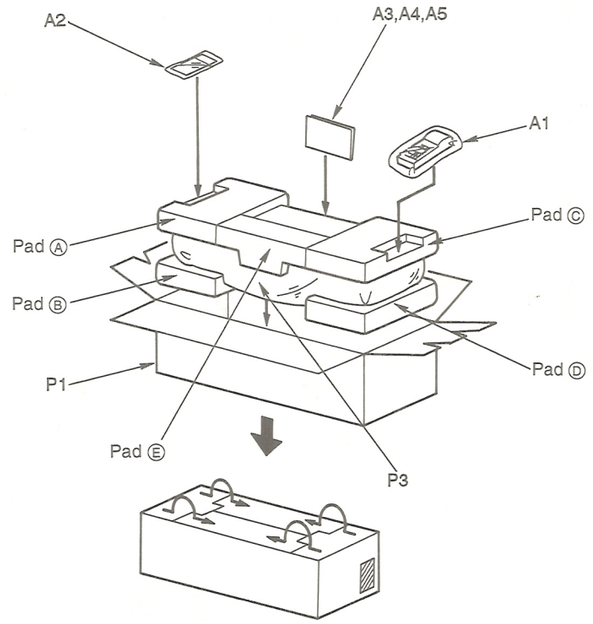

P2: Pad Ⓐ Ⓑ Ⓒ Ⓓ Ⓔ ass'y

Printed in Japan
F940212000HS/KH/HH